RAW WATER WELL #4 WELLHEAD

(IMMOKALEE SEMINOLE INDIAN RESERVATION)

STOF PROJECT NO. 383074

INDEX OF DRAWINGS

SHEET No.	SHEET NAME	DESCRIPTION
1.	G-001	COVER SHEET
2.	G-002	GENERAL NOTES, ABBREVIATIONS, LEGEND AND SYMBOLS
CIVIL		
3.	CD101	EXISTING SITE PLAN
4.	CD102	DEMOLITION SITE PLAN
5.	C-100	PROPOSED OVERALL SITE, SEDIMENT AND EROSION CONTROL PLAN
6.	C-101	SITE PLAN - OVERALL
7.	C-102	RAW WATER WELLHEAD AND PIPING - SITE PLAN
8.	C-501	NOTES AND DETAILS - I
9.	C-502	NOTES AND DETAILS - II
10.	C-503	NOTES AND DETAILS - III
11.	C-504	NOTES AND DETAILS - IV
12.	C-505	EROSION AND SEDIMENT CONTROL NOTES AND DETAILS - I
13.	C-506	EROSION AND SEDIMENT CONTROL NOTES AND DETAILS - II
PROCESS MECHANICAL		
14.	M-101	RAW WATER WELLHEAD PLAN
15.	M-102	RAW WATER WELLHEAD SECTION
16.	M-501	WELLHEAD MECHANICAL DETAILS
ELECTRICAL		
17.	E-001	SYMBOLS LEGEND AND NOTES
18.	E-101	OVERALL SITE PLAN - ELECTRICAL
19.	E-102	WELL SITE PLAN - ELECTRICAL
20.	E-201	CONTROL BUILDING ELECTRICAL PLAN
21.	E-501	PUMP CONTROL PANEL LAYOUT
22.	E-502	PUMP CONTROL PANEL TYPICAL WIRING DIAGRAM
23.	E-503	PLC CONTROL PANEL LAYOUT
24.	E-504	PLC CONTROL PANEL PROCESSOR RACK LAYOUT AND WIRING
25.	E-505	PLC CONTROL PANEL ELECTRICAL CONNECTIONS
26.	E-506	PLC CONTROL PANEL TYPICAL WIRING DIAGRAM
27.	E-507	STANDARD DETAILS I
28.	E-508	STANDARD DETAILS II
29.	E-509	STANDARD DETAILS III
30.	E-601	SINGLE LINE DIAGRAM

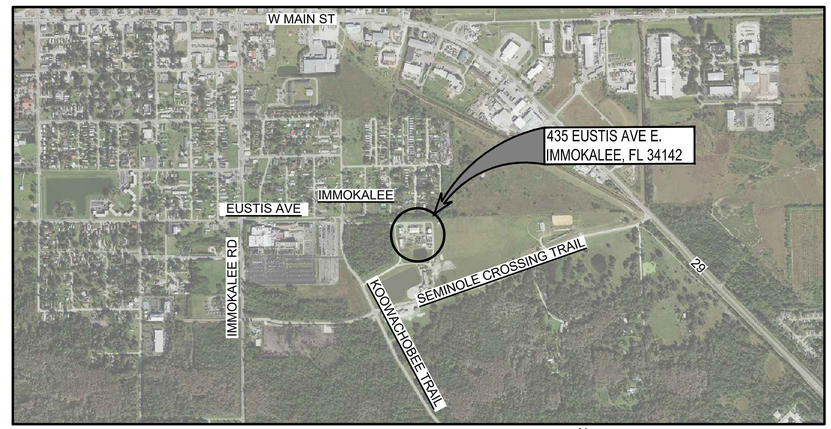

PROJECT VICINITY MAP

NTS

ALL HORIZONTAL AND VERTICAL CONTROL UTILIZES THE FOLLOWING:
HORIZONTAL DATUM - NAD83
VERTICAL DATUM - NAVD 1988

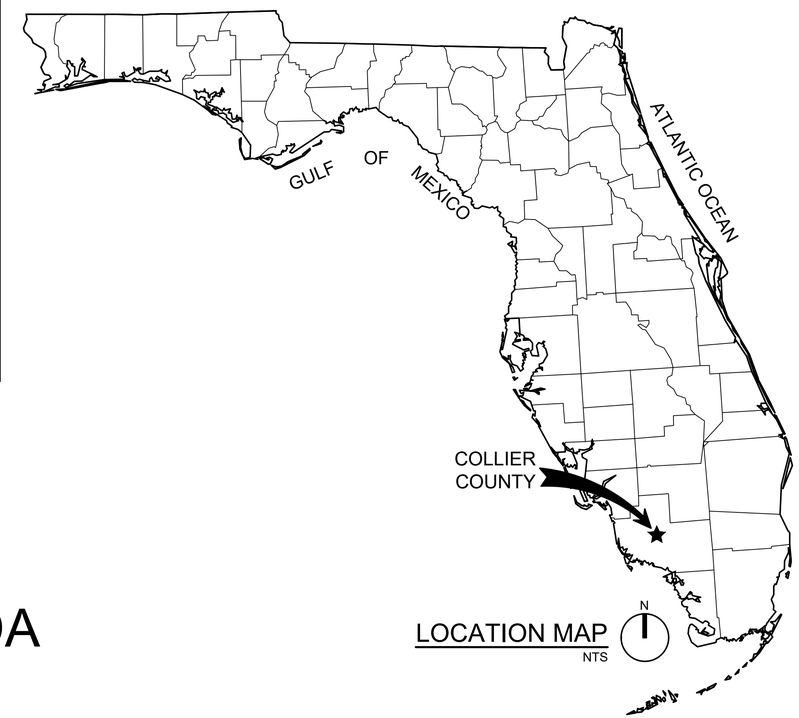

LOCATION MAP

NTS

Prepared For

THE SEMINOLE TRIBE OF FLORIDA

PUBLIC WORKS DEPARTMENT

BID PLANS
AUGUST 2023

811 Know what's below. Call before you dig.

For information regarding this project contact:

OSCAR R. BELLO, PE
STATE OF FLORIDA LICENSE NO. 61612
800 FAIRWAY DRIVE, SUITE 195
DEERFIELD BEACH, FLORIDA 33441-1828
(954) 851-1507
CIVIL & MECHANICAL ENGINEER OF RECORD

JEVAAN M. LEWIS, PE
STATE OF FLORIDA LICENSE NO. 76015
800 FAIRWAY DRIVE, SUITE 195
DEERFIELD BEACH, FLORIDA 33441-1828
(954) 851-1507
ELECTRICAL ENGINEER OF RECORD

TRIBAL COMMUNITY DEVELOPMENT

Stantec

DATE - AUGUST 2023
PROJECT NO. 17731189

SURVEY TOPOGRAPHY AND MAPPING SYMBOLS

ABBREVIATIONS

CONC.	CONCRETE
CMP	CORRUGATED METAL PIPE
DIP	DUCTILE IRON PIPE
E:	EASTING COORDINATES
EL.	ELEVATION
ELEC.	ELECTRIC
EQUIP.	EQUIPMENT
EX	EXISTING
FFE	FINISHED FLOOR ELEVATION
HDPE	HIGH DENSITY POLYETHILENE
IE	INVERT ELEVATION
IRC	IRON ROD AND CAP
LB	LICENSE BUSINESS
MH	MANHOLE
MJ	MECHANICAL JOINT
N:	NORTHING COORDINATES
N/D	NAIL AND DISC
NGVD29	NATIONAL GEODETIC VERTICAL DATUM OF 1929
NAVD88	NORTH AMERICAN VERTICAL DATUM OF 1988
PE	PLAIN END
PVC	POLYVINYL CHLORIDE
PW	POTABLE WATER
ORP	OXIDATION-REDUCTION POTENTIAL
RCP	REINFORCED CONCRETE PIPE
RWM	RAW WATER MAIN
R.E.	RIM ELEVATION
SST	STAINLESS STEEL
STOF	SEMINOLE TRIBE OF FLORIDA
STOF PWD	SEMINOLE TRIBE OF FLORIDA PUBLIC WORKS DEPARTMENT
TH-1	REFERENCE FOR TEST HOLE 1
VCP	VITRIFIED CLAY PIPE
QLD	HORIZONTAL UTILITY DESIGNATIONS FROM EXISTING UTILITY RECORD DRAWINGS ONLY

UTILITY LINES

BE	BURIED ELECTRIC LINE
BT-DUCT	BURIED ELECTRIC DUCT
BFO	BURIED FIBER OPTIC
BT	BURIED TELEPHONE
BTV	BURIED TELEVISION CABLE
FM	FORCE MAIN
OHW	OVERHEAD ELECTRIC WIRES
RAW	RAW WATER LINE
SAN	SANITARY SEWER LINE
SL	STREET LIGHT
STRM	STORM DRAINAGE PIPE
UNK	UNKNOWN UTILITY LINE
CW	CHILLED WATER LINE
WM	WATER MAIN
QLD WM	QL-D WATER MAIN
QLD NPW	QL-D NON-POTABLE WATER LINE
QLD CHM	QL-D CHEMICAL LINE
QLD FM	QL-D FORCE MAIN
QL-D	HORIZONTAL UTILITY DESIGNATIONS FROM EXISTING UTILITY RECORD DRAWINGS ONLY

LEGEND

	ANCHOR
	BOLLARD
	BLOW-OFF VALVE
	GROUND LIGHT
CALL	CALL BOX
	CATCH BASIN
	CONCRETE POST
	ELECTRIC METER
	ELECTRIC PANEL
E	ELECTRIC VAULT
E	ELECTRIC WIRE PULL BOX
FO	FIBER OPTIC VAULT
	FIRE HYDRANT
FM	FORCE MAIN VALVE
GTM	GATE MOTOR
	HANDICAP PARKING SPACE
	MAIL BOX
	METAL LIGHT POLE
	SANITARY SEWER MANHOLE
	SANITARY SEWER VALVE
	SATELLITE DISH
SL	STREET LIGHT WIRE PULL BOX
	SWITCH BOX
	SIGN ON POST
T	TELEPHONE VAULT
	TRANSFORMER ON CONC. PAD
	SPIGOT
	UTILITY MARKER
	VENT PIPE
	WATER VALVE
	WATER METER
	WOOD LIGHT POLE
	WOOD POST
	WOOD POWER POLE
	SPOT ELEVATION
	PIPE/LINE CONTINUES
	END OF PIPE/LINE - END OF SIGNAL
	REFERENCE FOR TEST HOLE

GENERAL SHEET NOTES

1. ALL CONSTRUCTION AND MATERIALS SHALL COMPLY WITH SEMINOLE TRIBE OF FLORIDA PUBLIC WORKS DEPARTMENT "MINIMUM CONSTRUCTION STANDARDS AND SPECIFICATIONS" AND APPLICABLE LOCAL AND NATIONAL CODES.
2. THE CONTRACTOR SHALL CONTACT SUNSHINE 811 AND NOTIFY SEMINOLE TRIBE OF FLORIDA (STOF) PUBLIC WORKS DEPARTMENT AT (954) 894-1060 AND DIGPUBLICWORKS@SEMTRIBE.COM BEFORE DIGGING OR TRENCHING OPERATIONS BEGIN.
3. THE CONTRACTOR SHALL BE RESPONSIBLE FOR OBTAINING ALL NECESSARY PERMITS TO COMPLETE THE WORK AS SPECIFIED.
4. ALL WORK PERFORMED SHALL BE IN FULL COMPLIANCE WITH THE REQUIREMENTS OF THE SEMINOLE TRIBE OF FLORIDA, AND ALL OTHER AGENCIES WHICH MAY EXERT JURISDICTION. WHEN CONFLICTS OCCUR BETWEEN REQUIREMENTS SHOWN WITHIN THE CONTRACTOR DOCUMENTS AND REGULATORY CRITERIA THE MORE STRINGENT REQUIREMENT SHALL PREVAIL. THE CONTRACTOR SHALL VERBALLY BRING ANY CONFLICT TO THE ATTENTION OF THE DESIGN ENGINEER IMMEDIATELY, FOLLOWED BY AN OFFICIAL WRITTEN NOTIFICATION WITHIN 24 HOURS.
5. CONTRACTOR IS RESPONSIBLE FOR OBTAINING OFFSITE AREAS FOR STORAGE OF MATERIALS AND EQUIPMENT. CONTRACTOR MATERIALS AND EQUIPMENT MAY BE STORED AT THE IMMOKALEE WTP SITE AT LOCATIONS TO BE DESIGNATED BY THE ENGINEER OR OWNER. CONTRACTOR SHALL REMOVE FENCE AND RESTORE STORAGE AREA WHEN COMPLETE. SECURITY OF CONSTRUCTION EQUIPMENT AND MATERIALS IS THE RESPONSIBILITY OF THE CONTRACTOR.
6. THE CONTRACTOR IS RESPONSIBLE FOR OBTAINING SITE, BUILDING, DIG, AND TREE REMOVAL PERMITS WHICH MAY BE REQUIRED THAT PERTAIN TO THE CONTRACTED WORK. SUCH PERMITS SHALL BE OBTAINED BY THE CONTRACTOR PRIOR TO THE CONTRACTOR BEGINNING WORK ON THE PORTION OF THE PROJECT REQUIRING SAID PERMITS.
7. PRIOR TO ANY CONSTRUCTION , CONTRACTOR SHALL SUBMIT AND OBTAIN APPROVAL OF A PLAN FOR VEHICULAR AND PEDESTRIAN SAFETY TO THE SEMINOLE TRIBE OF FLORIDA. THE PLAN SHALL INCLUDE TEMPORARY FENCING TO PROTECT AND SECURE THE WORK AREA. TEMPORARY SIDEWALKS AS NECESSARY APPROVALS AND PERMITS SHALL BE OBTAINED PRIOR TO INITIATING CONSTRUCTION ACTIVITIES.
8. THE CONTRACTOR SHALL TAKE ALL NECESSARY PRECAUTIONS TO PROTECT EXISTING IMPROVEMENTS WHICH ARE TO REMAIN IN PLACE FROM DAMAGE. RESTORE ALL PROPERTY AFFECTED AND/OR DAMAGED BY DEMOLITION AND/OR CONSTRUCTION ACTIVITIES TO A CONDITION EQUAL TO OR BETTER THAN EXISTED BEFORE COMMENCING CONSTRUCTION WORK, UNLESS SPECIFICALLY EXEMPTED BY THE DRAWINGS. RESTORATION WORK, INCLUDES, BUT IS NOT LIMITED TO PAVEMENT, BASE, SUBGRADE, CONCRETE CURBS, SIDEWALKS, STORM WATER PIPE, ETC. IF ADDITIONAL TOPOGRAPHY OR ANY OTHER INFORMATION IS NECESSARY FOR THE CONTRACTOR TO RECONSTRUCT ALL FACILITIES TO PRE CONSTRUCTION GRADES AND DIMENSIONS, THE ACQUISITION OF SUCH ADDITIONAL INFORMATION SHALL BE THE CONTRACTOR'S RESPONSIBILITY WITH COST INCLUDED IN BID PRICE. RECONSTRUCT ALL FACILITIES TO PRECONSTRUCTION GRADES AND DIMENSIONS, UNLESS OTHERWISE NOTED.
9. SEE NOTE ABOVE, PERMIT REQUIRED BEFORE ANY EXCAVATION. PRIOR TO THE START OF CONSTRUCTION, THE CONTRACTOR SHALL LOCATE EXISTING UTILITIES IN AND AROUND THE WORK AREA. THE CONTRACTOR SHALL POTHOLE FOR EXISTING UTILITIES, AS REQUIRED AT NO ADDITIONAL COST TO THE OWNER.
10. THE CONTRACTOR IS FULLY RESPONSIBLE FOR ANY AND ALL DAMAGES RESULTING FROM THE CONTRACTOR'S FAILURE TO PHYSICALLY LOCATE AND PRESERVE ANY AND ALL UNDERGROUND UTILITIES. THE OWNER AND DESIGN ENGINEER ASSUME NO LIABILITY FOR ANY DAMAGES SUSTAINED OR COSTS INCURRED BECAUSE OF THE CONTRACTOR'S OPERATIONS IN THE VICINITY OF EXISTING UTILITIES OR STRUCTURES. NOR FOR TEMPORARY BRACING AND SHORING OF SAME. CONTRACTOR SHALL SCHEDULE AND EXECUTE ALL WORK INVOLVING EXISTING UTILITIES AND SHALL BE COMPLETE AS REQUIRED TO MINIMIZE INTERRUPTION OF SERVICES, WHENEVER SUCH WORK TO REPAIR/RESTORE UTILITY SERVICE SHALL BE PERFORMED AS REQUIRED BY THE APPROPRIATE UTILITY. IF IT IS NECESSARY TO SHORE, BRACE, OR REGARDING THE METHOD TO USE FOR SUCH WORK. ALL COSTS RELATED TO SERVICE, MAINTENANCE, INTERRUPTION, REPAIR, RELOCATION AND RESTORATION ARE TO BE INCLUDED IN THE CONTRACTOR'S BID, ANY DELAY OR INCONVENIENCE CAUSE TO THE CONTRACTOR BY THE VARIOUS UTILITIES SHALL BE INCIDENTAL TO THE CONTRACT, AND NO EXTRA COMPENSATION SHALL BE PAID. CONTRACTOR IS ADVISED TO REFERENCE ASCE SUBSURFACE UTILITY ENGINEERING STANDARD.
11. UNLESS INDICATED TO BE RELOCATED OR REMOVED, ALL TREES, SHRUBS, ETC., SHALL BE PROTECTED. NO TREES SHALL BE REMOVED OR DESTROYED WITHOUT PRIOR APPROVAL OF THE ENGINEER AND OWNER. THE CONTRACTOR SHALL BE RESPONSIBLE FOR THE REPLACEMENT OF DAMAGED TREES IN ACCORDANCE WITH OWNER AND APPLICABLE REGULATORY REQUIREMENTS OR AS DIRECTED BY THE OWNER AT NO COST TO THE OWNER. PROTECTION OF TREES, SHRUBS, AND OTHER FLORA AND FAUNA ON THE CONSTRUCTION SITE WILL BE AT THE COST AND THE RESPONSIBILITY OF THE CONTRACTOR. CONTRACTOR SHALL BE RESPONSIBLE FOR COMPLIANCE WITH OWNER CODES REGARDING TREES AND LANDSCAPING AND FOR ALL REQUIRED PERMITS.

GENERAL SYMBOLOGY

- NEW CONSTRUCTION
- EXISTING (SCREENED)
- FUTURE (PHANTOM)
- EXISTING TO BE REMOVED OR DEMOLISHED

MATERIAL SYMBOLOGY

- CONCRETE (PLAN AND SECTION)
- GROUT OR SAND (PLAN AND SECTION)
- BRICK (PLAN AND SECTION)
- CMU (PLAN AND SECTION)
- STEEL/METAL/FRP (SMALL SCALE SECTION)
- CHECKER PLATE OR SOLID FRP GRATING (PLAN)
- CHECKER PLATE (SECTION)
- GRATING (PLAN)
- GRATING OR SOLID FRP GRATING (SECTION)
- SAFETY GRATING (PLAN)
- SAFETY GRATING (SECTION)
- RAILING (PLAN)
- WOOD (PLAN OR ELEVATION)
- LUMBER/FRAMING - NOMINAL
- LUMBER - TRIMMED (BLOCKING OR SHIMS)
- OR GLULAM (SECTION)
- GLULAM (ELEVATION)
- OR PLYWOOD (SMALL SCALE)
- FINISHED GRADE
- GRAVEL/DRAINROCK/AGGREGATE BASE
- REAL ESTATE SET ASIDE
- TEMPORARY WORK ZONE (TBD WITH STOF)
- TEMPORARY CONSTRUCTION ACCESS
- CONCRETE
- ASPHALT
- SOD
- TYPE "F" CURB
- GRAVEL

REFERENCE SYMBOLS

SECTION IDENTIFICATION

Section Letter; Sheet where shown; Sheet where cut

A A-301 — TITLE1 — SCALE: 1/4"=1'-0"

DETAIL IDENTIFICATION

Detail number; Sheet where shown; Sheet where cut; Standard Detail Number

1 A-501 — TITLE1 — SCALE: 3"=1'-0"

S-101 — WATERSTOP — REVMM/DD/YY or SCALE

INTERIOR ELEVATION IDENTIFICATION

Elevation Number; Sheet where shown; Sheet where cut

1 A-201 — TITLE1 — SCALE: 1/4"=1'-0"

EXTERIOR ELEVATION IDENTIFICATION

1 A-201 — TITLE1 — SCALE: 1/4"=1'-0"

EQUIPMENT IDENTIFICATION

SEE EQUIPMENT SCHEDULE/SPECIFICATIONS

EQUIPMENT DESIGNATOR — 12MAU-05 — EQUIPMENT NUMBER — AREA NUMBER

PLEASE NOTE:

DISCIPLINE SPECIFIC SYMBOLS ARE SHOWN ON THE DISCIPLINE GENERAL DRAWINGS.

FOR WELDING SYMBOLS USE AMERICAN WELDING SOCIETY STANDARD SYMBOLS.

MATCHLINE STA 10+00 / MATCHLINE SHEET C-112 — MATCHLINE SYMBOL

0 8' 16' 32" — ARCHITECTURAL UNIT SCALE BAR

0 20 40 — CIVIL UNIT SCALE BAR

HORZ 0 20 40; VERT 0 5 10 — SCALE IN FEET — CIVIL SCALE BAR WHERE THERE ARE HORIZONTAL AND VERTICAL SCALES

NORTH ARROW SYMBOLS — N

MISCELLANEOUS

- SHEET KEY SYMBOL
- REVISION TRIANGLE SYMBOL
- BREAK SYMBOL
- ANGLE SYMBOL
- CENTERLINE SYMBOL

TEST HOLE INVENTORY

Type of Utility

BT	- Buried Telephone
CATV	- Cable Television
BE	- Electrical
FM	- Force Main
FOC	- Fiber Optic Cable
GM	- Gas
PP	- Petroleum Products
RW	- Reclaimed Water
SAN	- Sanitary Sewer
EXP	- Exploratory
SL	- Streetlight
TS	- Traffic Signal
UNK	- Unknown
WM	- Water Main

Material

AC	- Asbestos Cement
CONC	- Concrete
CI	- Cast Iron Pipe
CMP	- Corrugated Metal Pipe
DB	- Duct Bank
DBC	- Direct Buried Cable
DIP	- Ductile Iron Pipe
HDPE	- High Density Polyethylene
PE	- Polyethylene Pipe
PVC	- Polyvinyl Chloride
RCP	- Reinforced Concrete Pipe
STL	- Steel
UNK	- Unknown
VCP	- Vitrified Clay Pipe
CP	- Concrete Pipe
Conduits	- (amount x size)

Marked By

HL	- Hub & Lath
IRC	- 5/8" IR & Cap *
N/D	- Nail & Disk *
X	- "X" in Concrete

* Disk and Cap Stamped "KEITH & ASSOC. LB 6860"

Units:	ENGLISH

Test Hole No.	Marked By	Northing	Easting	Utility	Size (inches)	Material	Direction	Cross Section View	Grade Elevation	Cover Depth (ft)	Utility Elevation
1	N/D	755324.8196	521912.9869	WM	SEE NOTE	DIP	↔		29.71	3.05	26.66
2	N/D	755308.0071	521901.7458	RW	6"	PVC	↕		29.74	2.32	27.42
3	IRC	755291.6078	521969.9757	WM	SEE NOTE	SEE NOTE	↕		30.33	3.25	27.08

BID PLANS

NO.	DATE	REVISION	BY	APVD

SEAL

DR ORB | CHK | ENGR ORB

Stantec
STANTEC (CERTIFICATE OF AUTHORIZATION #27013)
800 PARKWAY DRIVE SUITE 195
DEERFIELD BEACH, FLORIDA 33441-1828
TEL: (954) 487-1300
www.stantec.com

The Contractor shall verify and be responsible for all dimensions. DO NOT scale this drawing - any errors or omissions shall be reported to Stantec without delay.
The Copyrights to all designs and drawings are the property of Stantec. Reproduction or use for any purpose other than that authorized by Stantec is forbidden.

TRIBAL COMMUNITY DEVELOPMENT
PUBLIC WORKS DEPARTMENT
SEMINOLE TRIBE OF FLORIDA
5700 GRIFFIN RD.
DAVIE, FL 33024
PH (954) 966-6300

REUSE OF DOCUMENTS:

IMMOKALEE SEMINOLE INDIAN RESERVATION
RAW WATER WELL #4 WELLHEAD

GENERAL NOTES, ABBREVIATIONS, LEGEND AND SYMBOLS

811 Know what's below. Call before you dig.

DATE	2023.08
PROJ	17731189
DWG	1189-G-002
SHEET	G-002

ATTACHMENT A

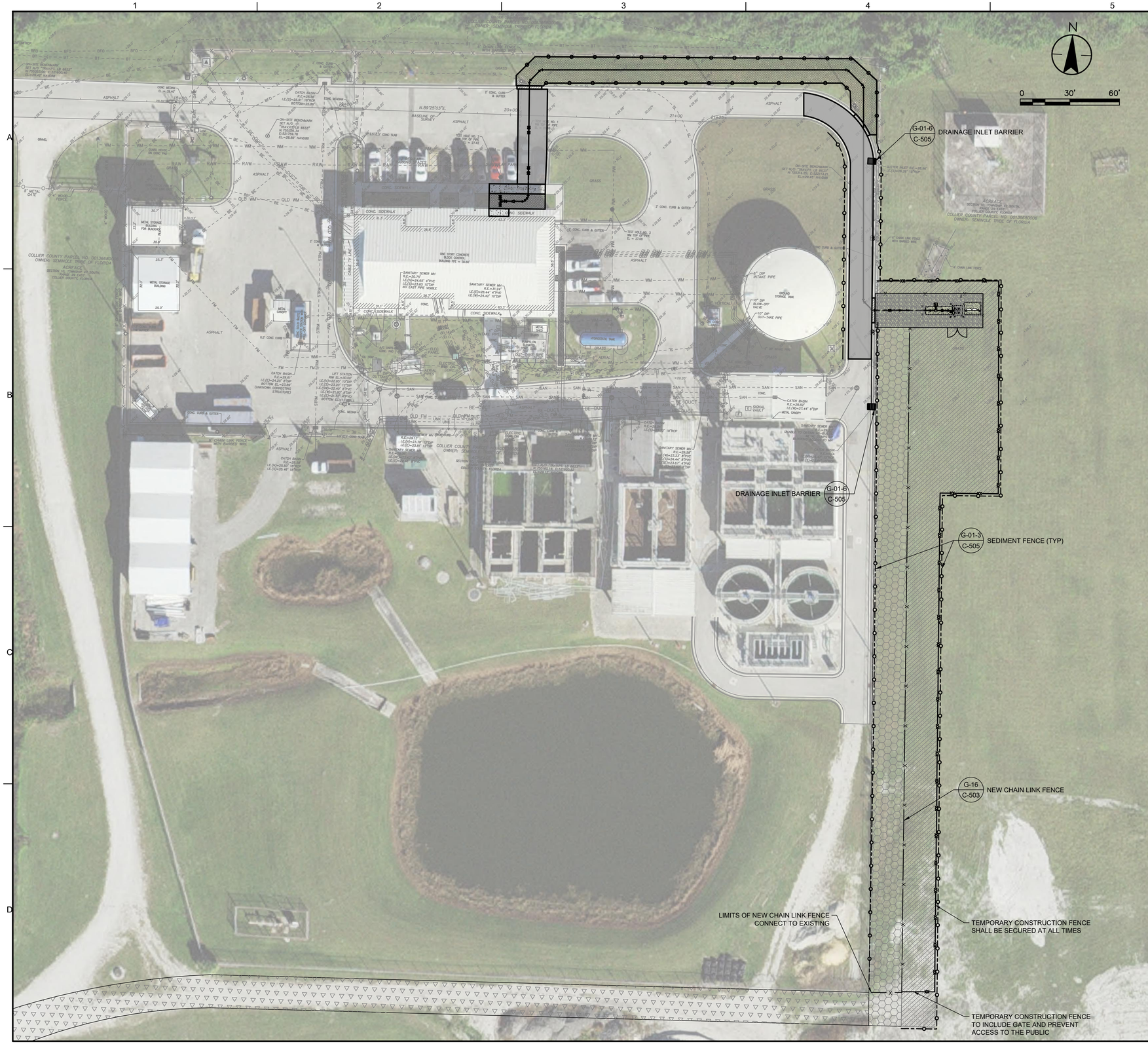

GENERAL SHEET NOTES

EROSION AND SEDIMENT CONTROL

1. CONTRACTOR IS RESPONSIBLE FOR EROSION AND SEDIMENT CONTROL ON THIS PROJECT. CONTRACTOR SHALL INSTALL AND MAINTAIN EROSION AND SEDIMENT CONTROL ACCORDING TO BEST MANAGEMENT PRACTICES (BMP'S) TO PREVENT RUNOFF, TRACKING, OR LOSS OF SEDIMENT FROM DISTURBED AREAS. ADDITIONAL MEASURES SHALL BE INSTALLED AT NO ADDITIONAL COST TO OWNER IF DEEMED NECESSARY BY OWNER'S REPRESENTATIVE.
2. EROSION AND SEDIMENT CONTROL SHALL BE INSTALLED PRIOR TO ANY LAND DISTURBING ACTIVITIES.
3. PROTECT MATERIAL STOCKPILES FROM CONTRIBUTING TO SEDIMENT RUNOFF.
4. ANY SOIL, MUD, OR DEBRIS WASHED, TRACKED OR DEPOSITED ONTO PAVED SURFACES SHALL BE REMOVED PRIOR TO THE END OF EACH WORK DAY.
5. CONTRACTOR SHALL MAINTAIN EROSION AND SEDIMENT CONTROL UNTIL PROJECT COMPLETION.
6. THE CONTRACTOR SHALL PRACTICE GOOD HOUSEKEEPING BY INSTITUTING A CLEAN, ORDERLY CONSTRUCTION SITE. THE FOLLOWING CONTROLS SHALL BE IMPLEMENTED TO FURTHER REDUCE POLLUTION AT THE PROTECTED SITE:

   A. SEE SEMINOLE TRIBE OF FLORIDA (STOF) PUBLIC WORKS STANDARD EROSION CONTROL NOTES. NO CONSTRUCTION MATERIAL SHALL BE DISCHARGED TO WATERS UNLESS AUTHORIZED BY STOF. ALL CONSTRUCTION DEBRIS SHALL BE DISPOSED OF IN AN APPROVED UPLAND LOCATION. BUILDING MATERIAL SHALL NOT BE DISPOSED OF IN WETLANDS OR BURIED ON-SITE.

   B. OFF-SITE VEHICLE TRACKING AND DUST CONTROL.

   - THE CONTRACTOR SHALL TAKE MEASURES TO ENSURE THE CLEANUP OF SEDIMENTS THAT HAVE BEEN TRACKED BY VEHICLES OR HAVE BEEN TRANSPORTED BY WIND OR STORMWATER ABOUT THE SITE OR ONTO NEARBY ROADWAYS.
   - STABILIZED CONSTRUCTION ENTRANCES AND CONSTRUCTION ROADS, IF APPROPRIATE, SHALL BE IMPLEMENTED IN ORDER TO REDUCE OFFSITE TRACKING.
   - LOADED HAUL TRUCKS SHALL BE COVERED WITH TARPAULIN.

   C. CONCRETE TRUCKS SHALL NOT BE WASHED OUT AT SITE. CONTRACTOR SHALL INDICATE IN WRITING TO THE ENGINEER THE LOCATION AT WHICH CONCRETE TRUCKS WILL BE WASHED OUT.
7. SPILL KIT MUST BE PROVIDED ON SITE DURING ENTIRE DURATION OF PROJECT OR UNTIL REMOVAL IS APPROVED BY OWNER. SPILL KIT MUST BE APPROPRIATE FOR SCOPE OF WORK & EQUIPMENT ONSITE.
8. CONTRACTOR SHALL BE RESPONSIBLE TO PROVIDE EROSION CONTROL MEASURES TO PREVENT CLOGGING OF EXISTING DRAINAGE STRUCTURES AND SEDIMENT INTRUSION INTO WATERWAYS DURING CONSTRUCTION. THESE MEASURES SHALL BE APPROVED BY THE ENGINEER AND CONFORM WITH CURRENT EDITION OF THE FDOT DESIGN STANDARDS FOR EROSION CONTROL (100 SERIES).
9. CONTRACTOR SHALL BE RESPONSIBLE FOR THE IMMEDIATE REMOVAL OF STORM WATER FROM ROADWAYS UTILIZED FOR MAINTAINING TRAFFIC IN A MANNER APPROVED BY THE ENGINEER. COST OF REMOVING THE WATER SHALL BE INCLUDED IN PAY RELATED BID ITEM.
10. SHOULD CONTRACTOR DISCHARGE WATER INTO EXISTING INLETS, CONTRACTOR SHALL CLEAN EXISTING DRAINAGE SYSTEM IN ITS ENTIRETY PRIOR TO FINAL SITE APPROVAL. CLEANING SHALL INCLUDE:
    - 10.1. VACUUM OF ALL STRUCTURES WITHIN CONSTRUCTION LIMIT
    - 10.2. JET CLEANING OF CONNECTING DRAINAGE PIPES
    - 10.3. CCTV OF DRAINAGE PIPES AND PROVIDE CDs TO THE OWNER AT END OF CONSTRUCTION
11. CONTRACTOR RESPONSIBLE TO SECURE FDEP STORMWATER POLLUTION PREVENTION PLAN (SWPP) PERMIT AS PART OF THE NATIONAL POLLUTANT DISCHARGE ELIMINATION SYSTEM (NDPES) PERMIT FOR STORMWATER DISCHARGE FROM CONSTRUCTION ACTIVITIES GREATER THAN 1 ACRE.
12. CONTRACTOR SHALL PROVIDE SPILL CONTAINMENT MEASUREMENTS FOR ALL CONSTRUCTION EQUIPMENT, VEHICLES, POWER TOOLS, GAS CONTAINERS, AT ALL TIMES.
13. THE CONTRACTOR SHALL CONTACT SUNSHINE 811 AND NOTIFY SEMINOLE TRIBE OF FLORIDA (STOF) PUBLIC WORKS DEPARTMENT AT (954) 894-1060 AND DIGPUBLICWORKS@SEMTRIBE.COM BEFORE DIGGING OR TRENCHING OPERATIONS BEGIN.
14. THE CONTRACTOR SHALL BE RESPONSIBLE FOR OBTAINING ALL NECESSARY PERMITS TO COMPLETE THE WORK AS SPECIFIED.

LEGEND:

- REAL ESTATE SET ASIDE
- TEMPORARY WORK ZONE
- TEMPORARY CONSTRUCTION ACCESS
- CONCRETE
- ASPHALT
- SOD
- TYPE "F" CURB
- GRAVEL
- INLET PROTECTION
- SILT FENCE
- NEW CHAIN LINK FENCE
- NEW TEMPORARY CONSTRUCTION FENCE

BID PLANS

NO.	DATE	REVISION	BY	SEAL

ENGR	DR	CHK	APVD

Stantec
STANTEC (CERTIFICATE OF AUTHORIZATION #27013)
800 PARWAY DRIVE SUITE 193
DEERFIELD BEACH, FLORIDA 33441-1828
TEL: (954) 487-1300
www.stantec.com

The Contractor shall verify and be responsible for all dimensions. DO NOT scale the drawing - any errors or omissions shall be reported to Stantec without delay.
The Copyright to all designs and drawings are the property of Stantec. Reproduction or use for any purpose other than that authorized by Stantec is forbidden.

TRIBAL COMMUNITY DEVELOPMENT

PUBLIC WORKS DEPARTMENT
SEMINOLE TRIBE OF FLORIDA
5700 GRIFFIN RD.
DAVIE, FL 33024
PH (954) 966-6300

REUSE OF DOCUMENTS:

IMMOKALEE SEMINOLE INDIAN RESERVATION
RAW WATER WELL #4 WELLHEAD

PROPOSED OVERALL SITE, SEDIMENT AND EROSION CONTROL PLAN

811 Know what's below. Call before you dig.

DATE	2023.08
PROJ	17731189
DWG	11189-C-100
SHEET	C-100

DWG PATH: \\Us0231-ppfss01\workgroup\1773\active\17731189 Immokalee Well #4 Phase 2_Design\drawings\civil\11189-C-100.dwg

PLOT DATE: Aug11, 2023 9:59am

ATTACHMENT A

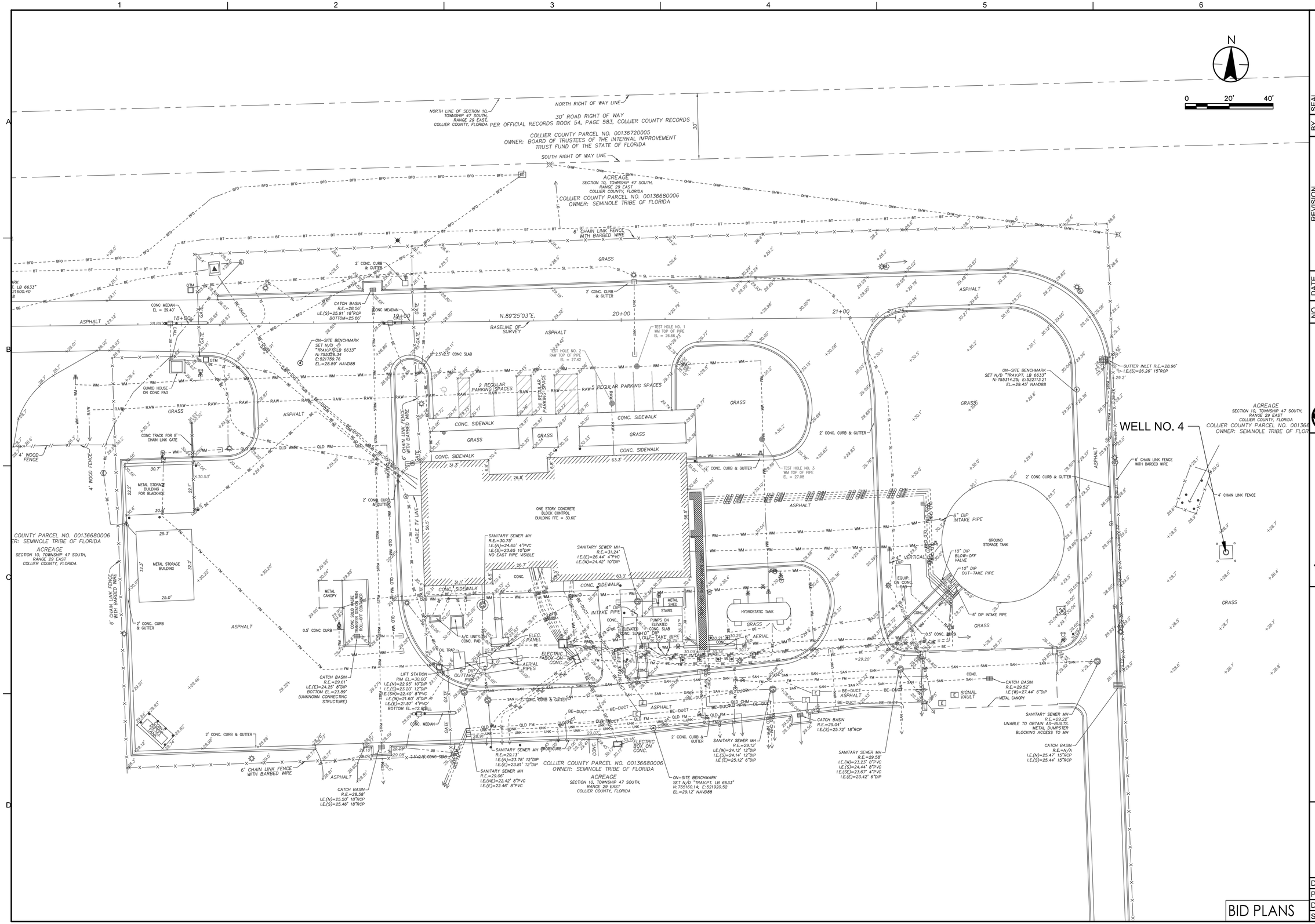

NO.	DATE	REVISION	BY	APVD

	DR	CHK	APVD
ENGR	ML	ORB	ORB

SEAL

Stantec

STANTEC (CERTIFICATE OF AUTHORIZATION #27013)
800 PARKWAY DRIVE SUITE 195
DEERFIELD BEACH, FLORIDA 33441-1828
TEL: (954) 487-1450
www.stantec.com

The Contractor shall verify and be responsible for all dimensions. DO NOT scale the drawing - any errors or omissions shall be reported to Stantec without delay.
The Copyrights to all designs and drawings are the property of Stantec. Reproduction or use for any purpose other than that authorized by Stantec is forbidden.

TRIBAL COMMUNITY DEVELOPMENT

PUBLIC WORKS DEPARTMENT
SEMINOLE TRIBE OF FLORIDA
5700 GRIFFIN RD.
DAVIE, FL 33024
PH (954) 966-6300

REUSE OF DOCUMENTS:

IMMOKALEE SEMINOLE INDIAN RESERVATION
RAW WATER WELL #4 WELLHEAD

EXISTING SITE PLAN

811 Know what's **below.** **Call** before you dig.

BID PLANS

DATE	2023.08
PROJ	17731189
DWG	11189-CD-101
SHEET	CD101

DWG PATH: \\Us0231-ppfss01\workgroup\1773\active\17731189 Immokalee Well #4 Phase 2_Design\drawings\civil\11189-CD-101.dwg

PLOT DATE: Aug10, 2023 1:49pm

ATTACHMENT A

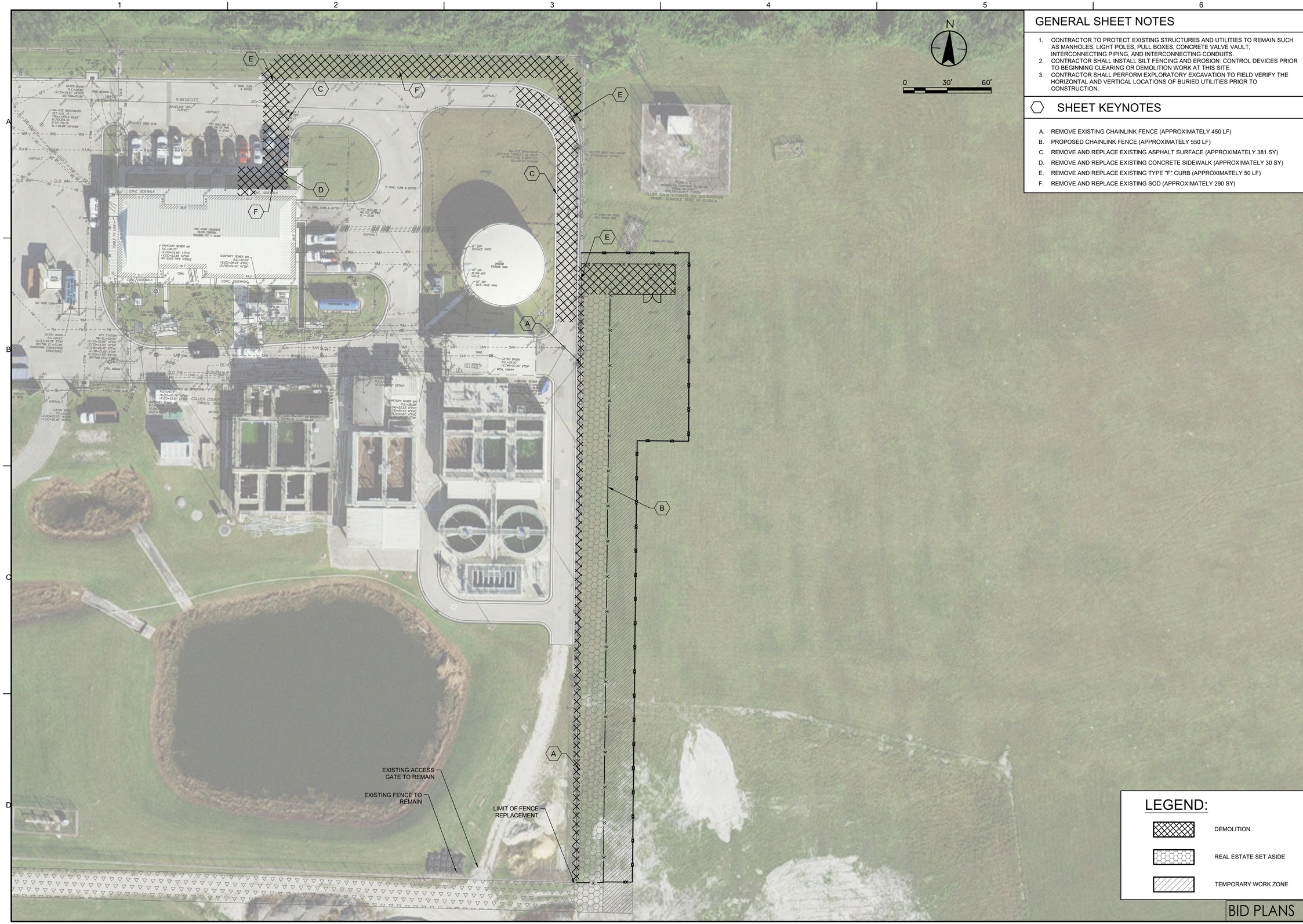

GENERAL SHEET NOTES

1. CONTRACTOR TO PROTECT EXISTING STRUCTURES AND UTILITIES TO REMAIN SUCH AS MANHOLES, LIGHT POLES, PULL BOXES, CONCRETE VALVE VAULT, INTERCONNECTING PIPING, AND INTERCONNECTING CONDUITS.
2. CONTRACTOR SHALL INSTALL SILT FENCING AND EROSION CONTROL DEVICES PRIOR TO BEGINNING CLEARING OR DEMOLITION WORK AT THIS SITE.
3. CONTRACTOR SHALL PERFORM EXPLORATORY EXCAVATION TO FIELD VERIFY THE HORIZONTAL AND VERTICAL LOCATIONS OF BURIED UTILITIES PRIOR TO CONSTRUCTION.

SHEET KEYNOTES

A. REMOVE EXISTING CHAINLINK FENCE (APPROXIMATELY 450 LF)
B. PROPOSED CHAINLINK FENCE (APPROXIMATELY 550 LF)
C. REMOVE AND REPLACE EXISTING ASPHALT SURFACE (APPROXIMATELY 381 SY)
D. REMOVE AND REPLACE EXISTING CONCRETE SIDEWALK (APPROXIMATELY 30 SY)
E. REMOVE AND REPLACE EXISTING TYPE "F" CURB (APPROXIMATELY 50 LF)
F. REMOVE AND REPLACE EXISTING SOD (APPROXIMATELY 290 SY)

NO.	DATE	REVISION	BY	APVD

ENGR	DR	CHK
ORB	ML	ORB

SEAL

Stantec
STANTEC (CERTIFICATE OF AUTHORIZATION #27013)
800 PARWAY DRIVE SUITE 195
DEERFIELD BEACH, FLORIDA 33441-1828
TEL: (954) 487-1300
www.stantec.com

The Contractor shall verify and be responsible for all dimensions. DO NOT scale the drawing - any errors or omissions shall be reported to Stantec without delay.
The Copyright to all designs and drawings are the property of Stantec. Reproduction or use for any purpose other than that authorized by Stantec is forbidden.

TRIBAL COMMUNITY DEVELOPMENT

PUBLIC WORKS DEPARTMENT
SEMINOLE TRIBE OF FLORIDA
5700 GRIFFIN RD.
DAVIE, FL 33024
PH (954) 966-6300

REUSE OF DOCUMENTS:

IMMOKALEE SEMINOLE INDIAN RESERVATION
RAW WATER WELL #4 WELLHEAD

DEMOLITION SITE PLAN

811 Know what's below. Call before you dig.

DATE	2023.08
PROJ	17731189
DWG	11189-CD-102
SHEET	CD102

BID PLANS

DWG PATH: \\Us0231-ppfss01\workgroup\1773\active\17731189 Immokalee Well #4 Phase 2_Design\drawings\civil\11189-CD-102.dwg

PLOT DATE: Aug11, 2023 10:12am

ATTACHMENT A

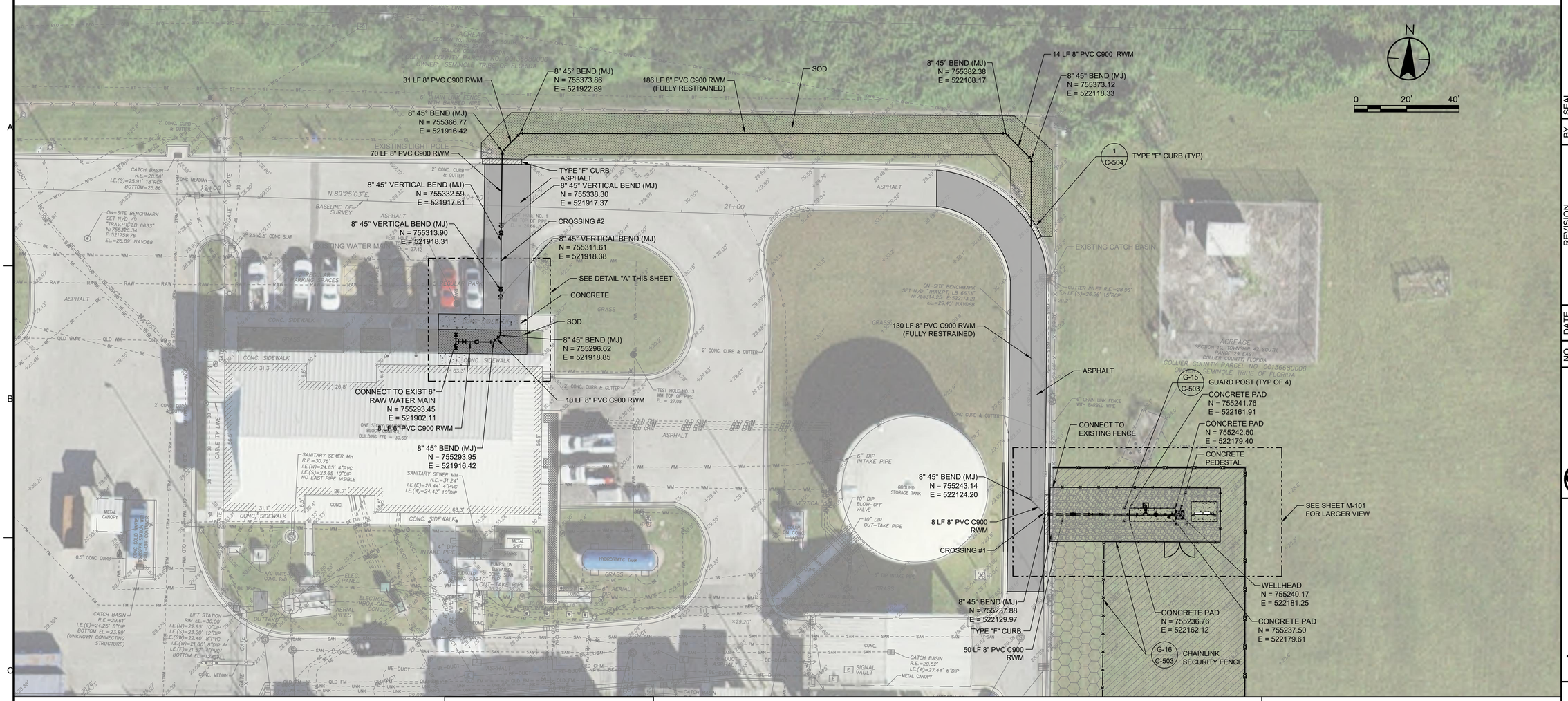

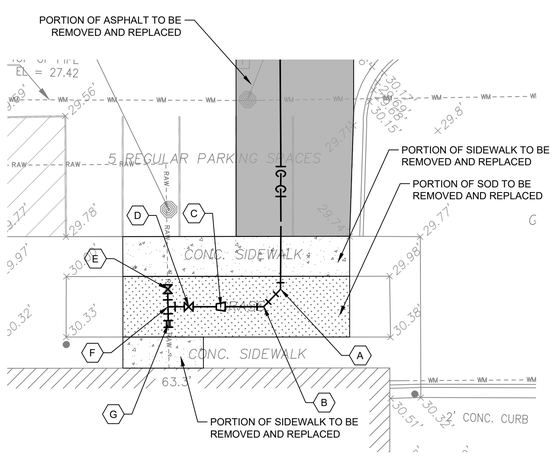

A C-101 DETAIL A
SCALE: NONE

SHEET KEYNOTES

A. 8" 45° BEND (MJ)
N = 755296.62
E = 521918.85

B. 8" 45° BEND (MJ)
N = 755293.95
E = 521916.42

C. 8"x6" REDUCER (MJ)
N = 755293.72
E = 521910.00

D. 6" GATE VALVE (MJ)
N = 755293.56
E = 521905.21

E. 6" GATE VALVE (MJ)
N = 755296.08
E = 521902.00

F. 6"x6" TEE (MJ)
N = 755293.45
E = 521902.11

G. 6" CUT-IN SLEEVE (MJ)
N = 755290.89
E = 521902.24

LEGEND:

- REAL ESTATE SET ASIDE
- TEMPORARY WORK ZONE (TBD WITH STOF)
- TEMPORARY CONSTRUCTION ACCESS
- CONCRETE
- ASPHALT
- SOD
- TYPE "F" CURB
- GRAVEL

UTILITY CROSSING TABLE

NO.	EXISTING PIPE DESCRIPTION	BOTTOM OF EXISTING PIPE ELEVATION	PROPOSED PIPE DESCRIPTION	TOP OF PROPOSED PIPE ELEVATION	CLR.	GRADE ELEVATION
1	EXISTING 15" RCP DRAINAGE	24.9±	8" C900 RWM	23.4	1'-6"	28.7
2	EXISTING 12" DIP PW	25.1	8" C900 RWM	24.1	1'-0"	29.6

BID PLANS

NO.	DATE	REVISION	BY	SEAL

ENGR	DR	APVD
ORB	ML	ORB

Stantec
STANTEC CERTIFICATE OF AUTHORIZATION #27013
800 PARKWAY DRIVE SUITE 115
DEERFIELD BEACH, FLORIDA 33441-1828
TEL: 954-975-5500
www.stantec.com

The Contractor shall verify and be responsible for all dimensions. DO NOT scale this drawing - any errors or omissions shall be reported to Stantec without delay.
The Copyright to all designs and drawings are the property of Stantec. Reproduction or use for any purpose other than that authorized by Stantec is forbidden.

TRIBAL COMMUNITY DEVELOPMENT

PUBLIC WORKS DEPARTMENT
SEMINOLE TRIBE OF FLORIDA
5700 GRIFFIN RD.
DAVIE, FL 33024
PH (954) 966-6300

REUSE OF DOCUMENTS:

IMMOKALEE SEMINOLE INDIAN RESERVATION
RAW WATER WELL #4 WELLHEAD

SITE PLAN - OVERALL

811 Know what's below. Call before you dig.

DATE	2023.08
PROJ	17731189
DWG	11189-C-101
SHEET	C-101

DWG PATH: \\Us0231-ppfss01\workgroup\1773\active\17731189 Immokalee Well #4 Phase 2_Design\drawings\civil\11189-C-101.dwg

PLOT DATE: Aug11, 2023 10:17am

ATTACHMENT A

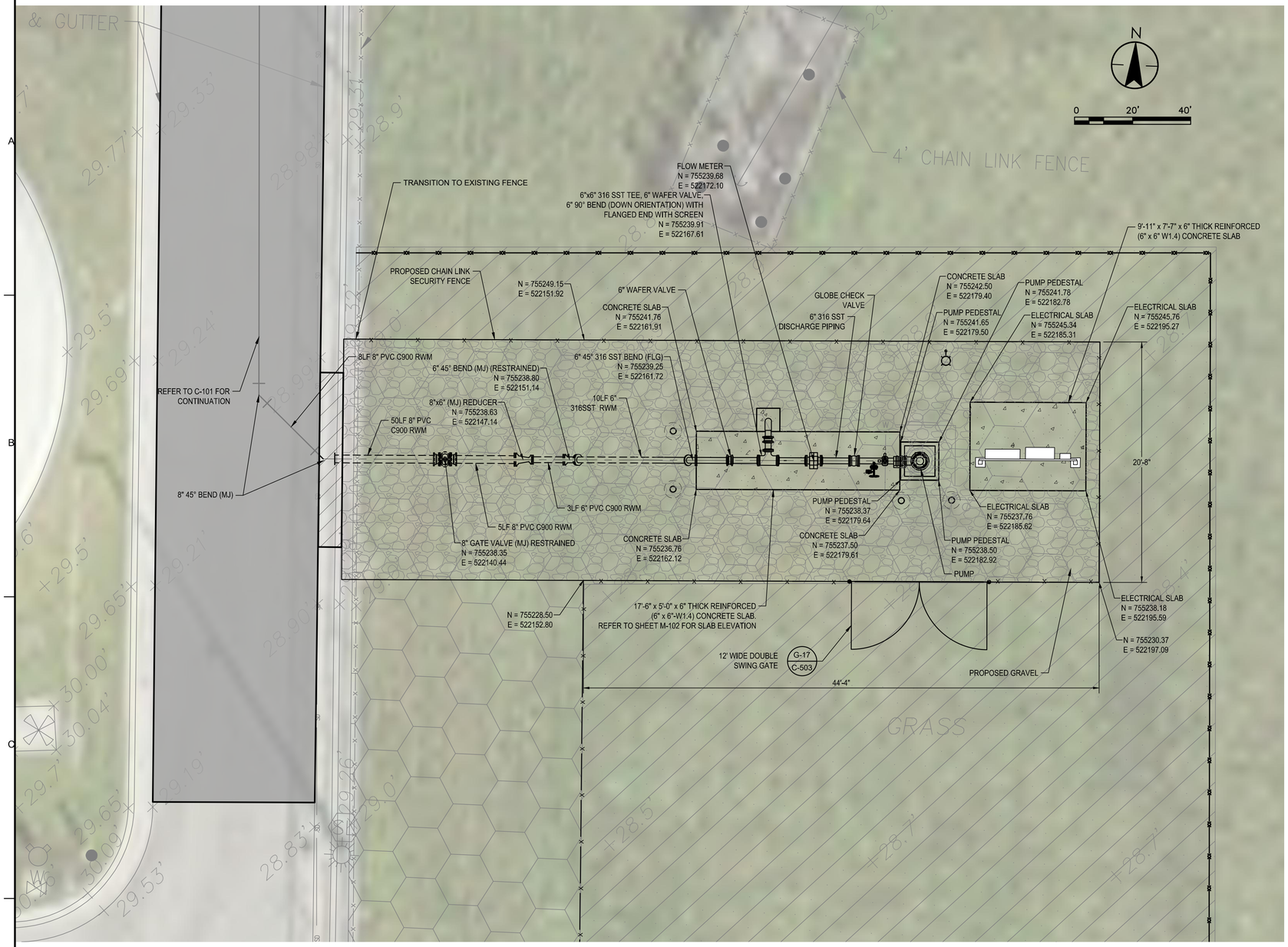

LEGEND:

- REAL ESTATE SET ASIDE
- TEMPORARY WORK ZONE
- TEMPORARY CONSTRUCTION ACCESS
- CONCRETE
- ASPHALT
- SOD
- TYPE "F" CURB
- GRAVEL
- CHANLINK FENCE
- NEW TEMPORARY CONSTRUCTION FENCE

BID PLANS

NO.	DATE	REVISION	BY	SEAL

ENGR	DR	CHK	APVD
ORB	ORB		

Stantec
STANTEC (CERTIFICATE OF AUTHORIZATION #27013)
800 PARKWAY DRIVE SUITE 195
DEERFIELD BEACH, FLORIDA 33441-1828
TEL: 954-487-1300
www.stantec.com

The Contractor shall verify and be responsible for all dimensions. DO NOT scale the drawing - any errors or omissions shall be reported to Stantec without delay.
The Copyright to all designs and drawings are the property of Stantec. Reproduction or use for any purpose other than that authorized by Stantec is forbidden.

TRIBAL COMMUNITY DEVELOPMENT

PUBLIC WORKS DEPARTMENT
SEMINOLE TRIBE OF FLORIDA
5700 GRIFFIN RD.
DAVIE, FL 33024
PH (954) 966-6300

REUSE OF DOCUMENTS:

IMMOKALEE SEMINOLE INDIAN RESERVATION
RAW WATER WELL #4 WELLHEAD

RAW WATER WELLHEAD
SITE PLAN

811 Know what's below. Call before you dig.

DATE	2023.08
PROJ	17731189
DWG	11189-C-102
SHEET	C-102

DWG PATH: \\Us0231-ppfss01\workgroup\1773\active\17731189 Immokalee Well #4 Phase 2_Design\drawings\civil\11189-C-102.dwg

PLOT DATE: Aug11, 2023 3:57pm

WATER AND SEWER MAIN SEPARATION REQUIREMENTS:

1. PARALLEL WATER AND SEWER MAINS SHALL HAVE A MINIMUM 10 FEET HORIZONTAL SEPARATION. WHERE THIS IS NOT POSSIBLE, THE SEWER MAIN SHALL BE IN A SEPARATE TRENCH AND BE AT LEAST 18 INCHES BELOW THE WATER MAIN OR BOTH MAINS SHALL BE DUCTILE IRON WITH A MINIMUM 18-INCH HORIZONTAL CLEARANCE, PER PRESSURE PIPE SPECIFICATIONS.
2. THE SEWER MAIN SHALL CROSS BELOW ALL WATER MAINS WITH A MINIMUM OF 18 INCHES VERTICAL CLEARANCE. WHERE THE CLEARANCE IS LESS THAN 18 INCHES, THE SEWER MAIN AND THE WATER MAIN SHALL BE DUCTILE IRON PIPE FOR 20 FEET CENTERED ON THE POINT OF CROSSING WITH A MINIMUM 12-INCH CLEARANCE. ALL JOINTS ON THE WATER MAIN WITHIN 20 FEET OF THE CROSSING SHALL BE MECHANICALLY RESTRAINED.
3. IF A SEWER MAIN MUST CROSS ABOVE A WATER MAIN, REGARDLESS OF VERTICAL CLEARANCE MUST RECEIVE WRITTEN APPROVAL FROM THE SEMINOLE TRIBE OF FLORIDA PUBLIC WORKS DEPARTMENT. IF APPROVAL GRANTED THE PRECAUTION NOTED IN ITEM 2 (ABOVE) SHALL BE TAKEN AND THE CROSSING CONDITION SHALL BE NOTED ON PLANS.
4. A MINIMUM OF 18" VERTICAL SEPARATION BETWEEN WATER MAINS AND STORM SEWERS SHALL BE MAINTAINED. WHERE THIS IS NOT POSSIBLE WATER MAIN SHALL BE D.I.P. WITH NO LESS THAN 12" SEPARATION.
5. MINIMUM CLEARANCE BETWEEN WATER MAINS AND DRAINAGE STRUCTURES SHALL BE 18 INCHES UNLESS OTHERWISE APPROVED BY SEMINOLE TRIBE OF FLORIDA PUBLIC WORKS DEPARTMENT, AND MAXIMUM DEFLECTION PER EACH JOINT IS NOT TO EXCEED 75% OF THE MANUFACTURER'S MAXIMUM ALLOWED DEFLECTION.
6. A THREE (3) FEET LATERAL SEPARATION SHALL BE MAINTAINED BETWEEN WATER/ SEWER LINES AND OBSTRUCTIONS (I.E. CATCH BASINS, CONCRETE POLES, ETC.), TEN (10) FEET FROM TREES.
7. ALL EFFORTS SHALL BE MADE SO THAT WATER AND FORCE MAINS CROSS ABOVE DRAINAGE LINES WITH ADEQUATE COVER AND SEPARATION.
8. CONFLICT MANHOLES ARE NOT PERMISSIBLE UNLESS PRIOR WRITTEN AUTHORIZATION IS OBTAINED FROM THE SEMINOLE TRIBE OF FLORIDA PUBLIC WORKS DEPARTMENT.
9. ALL EFFORTS SHALL BE MADE SO THAT WATER AND FORCE MAINS CROSS ABOVE DRAINAGE LINES WITH ADEQUATE COVER AND SEPARATION. IF THIS IS NOT POSSIBLE, IT SHALL BE INDICATED ON THE PLANS.
10. WHERE PIPELINES ARE PLACED IN AREAS OF HEAVY VEGETATION OR NEAR LARGE TREES THE CONTRACTOR SHALL PROVIDE ROOT BARRIER FOR PIPE PROTECTION.
11. WHERE IT IS IMPRACTICAL TO COMPLY WITH UTILITY SEPARATION REQUIREMENTS SPECIFIED ABOVE, DEVIATIONS MAY BE CONSIDERED WITH PRIOR APPROVAL FROM STOF PWD.

SCALE: NTS
REVISION BY: J.D.
DATE: 03/20/2017

WATER AND SEWER SEPARATION REQUIREMENTS

G-02

C:\pw_work\dir\den001\jarez5\d0582435\GENERAL-DETAILS.dwg [G-02] Mar 21, 2017 - 1:43pm

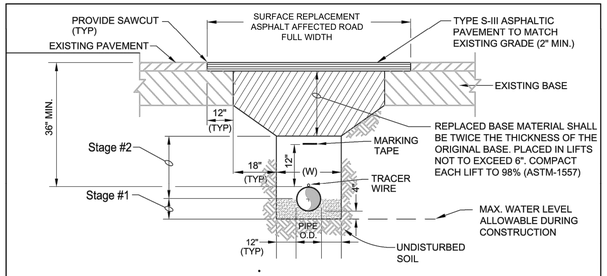

DENSITY PROCEDURES:

THE BACKFILL FOR STAGE 1 AND STAGE 2 SHALL BE PLACED IN 6" MAXIMUM THICKNESS LIFTS (COMPACTED THICKNESS) AND SHALL BE COMPACTED TO 98% OF MAXIMUM DENSITY AS DETERMINED BY ASTM-1557.

STAGE #1

THE CONTRACTOR SHALL PROVIDE ADEQUATE COMPACTED FILL BENEATH THE HAUNCHES OF THE PIPE, USING MECHANICAL TAMPS SUITABLE FOR THIS PURPOSE. THIS COMPACTION APPLIES TO THE MATERIAL PLACED BENEATH THE HAUNCHES OF THE PIPE AND ABOVE ANY BEDDING REQUIRED.

STAGE #2

THE CONTRACTOR SHALL OBTAIN A WELL-COMPACTED BED AND FILL ALONG THE SIDES OF THE PIPE AND TO A POINT INDICATING THE TOP OF SUB-GRADE MATERIAL.

GENERAL NOTES:

1. UNLESS OTHERWISES SPECIFIED, BEDDING MATERIAL SHALL CONSIST OF SELECT BACKFILL MATERIAL 2-INCH MAXIMUM IN SIZE. BACKFILL SHALL BE FREE OF UNSUITABLE MATERIAL SUCH AS LARGE ROCK, MUCK, AND DEBRIS.
2. BASE MATERIAL SHALL BE PLACED IN 6" LAYERS AND EACH LAYER COMPACTED TO 98% OF MAXIMUM DENSITY PER ASTM-1557.
3. ASPHALT CONCRETE PAVEMENT JOINTS SHALL BE MECHANICALLY SAWCUT.
4. SURFACE MATERIAL WILL BE CONSISTENT WITH THE EXISTING SURFACE. THE AFFECTED AREA SHALL BE RESTORED TO EQUAL OR BETTER CONDITION.
5. THE DEVELOPER/CONTRACTOR SHALL BE RESPONSIBLE FOR COMPLIANCE REGARDING ANY ADDITIONAL SPECIFICATIONS AS REQUIRED BY THE PROPERTY OWNER. (FDOT, COUNTY, STOF PWD, ETC.....)
6. ANY DAMAGE TO TRAFFIC SIGNALIZATION EQUIPMENT SHALL BE COORDINATED WITH GOVERNING TRAFFIC AGENCY AT THE CONTRACTOR'S EXSPENSE.
7. THESE GUIDELINES MAY BE SUPERCEDED BY THE PERMITTING AGENCY.

SCALE: NTS
REVISION BY: J.D.
DATE: 03/20/2017

TYPICAL UTILITY TRENCH (PAVED AREA)

G-03

C:\pw_work\dir\den001\jarez5\d0582435\GENERAL-DETAILS.dwg [G-03] Mar 21, 2017 - 1:43pm

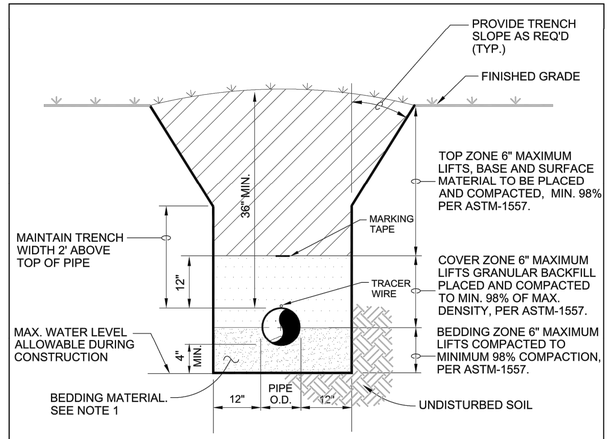

NOTES:

1. UNLESS OTHERWISES SPECIFIED, BEDDING MATERIAL SHALL CONSIST OF SELECT BACKFILL MATERIAL 2-INCH MAXIMUM IN SIZE. BACKFILL SHALL BE FREE OF UNSUITABLE MATERIAL SUCH AS LARGE ROCK, MUCK, AND DEBRIS.
2. THE PIPE SHALL BE FULLY SUPPORTED FOR ITS ENTIRE LENGTH WITH APPROPRIATE COMPACTION UNDER THE PIPE HAUNCHES.
3. THE PIPE SHALL BE PLACED IN A DRY TRENCH.
4. DENSITY TESTS ARE REQUIRED IN EACH LIFT ABOVE THE PIPE AT INTERVALS OF 100' MAXIMUM IN PUBLIC RIGHTS-OF-WAY AND 200' MAXIMUM IN UTILITY EASEMENTS.
5. THE DEVELOPER/CONTRACTOR SHALL COMPLY WITH ALL APPLICABLE TRENCH SAFETY LAWS AND REGULATIONS.
6. THE AFFECTED AREA SHALL BE RESTORED TO EQUAL OR BETTER CONDITION AS REQUIRED.

SCALE: NTS
REVISION BY: J.D.
DATE: 03/20/2017

TYPICAL UTILITY TRENCH (UNPAVED AREA)

G-04

C:\pw_work\dir\den001\jarez5\d0582435\GENERAL-DETAILS.dwg [G-04] Mar 21, 2017 - 1:43pm

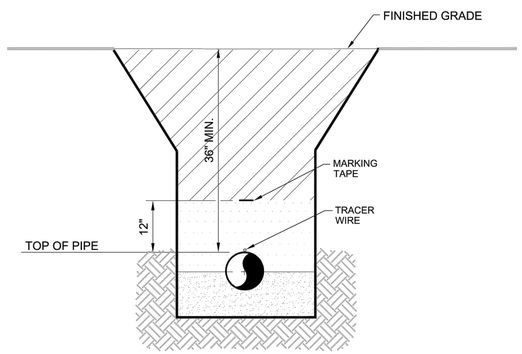

NOTES:

1. A SINGLE MARKING TAPE SHALL BE PLACED ALONG CENTERLINE OF PIPE.
2. UTILITY MARKING TAPE SHALL BE 3 INCHES WIDE WITH A MINIMUM 5.0 MIL OVERALL THICKNESS. THE TAPE SHALL BE CONSTRUCTEDOF 0.8 MIL CLEAR VIRGIN POLYPROPYLENE FILM, REVERSE PRINTED AND LAMINATED TO A 0.35 SOLID ALUMINUM FOIL CORE AND THEN LAMINATED TO A 3.75 MIL CLEAR VIRGIN POLYETHYLENE FILM.
3. UTILITY TYPE SHALL BE IDENTIFIED BY THE APWA COLOR-CODE AND UTILITY LEGEND PRINTED ON THE MARKING TAPE.

APWA UNIFORM COLOR CODE FOR MARKING UNDERGROUND UTILITY LINES

COLOR	TAPE TEXT	UTILITY TYPE
BLUE	CAUTION WATER LINE BURIED BELOW	POTABLE WATER AND ASSOCIATED LINES
RED	CAUTION ELECTRIC LINE BURIED BELOW	ELECTRICAL, LIGHTING
YELLOW	CAUTION GAS LINE BURIED BELOW	GAS, OIL, PETROLEUM
ORANGE	CAUTION COMMUNICATION LINE BURIED BELOW	COMMUNICATION, ALARM
PURPLE	CAUTION RECLAIMED WATER BURIED BELOW	RECLAIMED WATER, IRRIGATION
GREEN	CAUTION SEWER LINE BURIED BELOW	SEWER OR DRAINLINE
BROWN	CAUTION RAW WATER LINE BURIED BELOW	RAW WATER

SCALE: NTS
REVISION BY: J.D.
DATE: 03/20/2017

UTILITY TRENCH MARKING TAPE

G-05

C:\pw_work\dir\den001\jarez5\d0582435\GENERAL-DETAILS.dwg [G-05] Mar 21, 2017 - 1:43pm

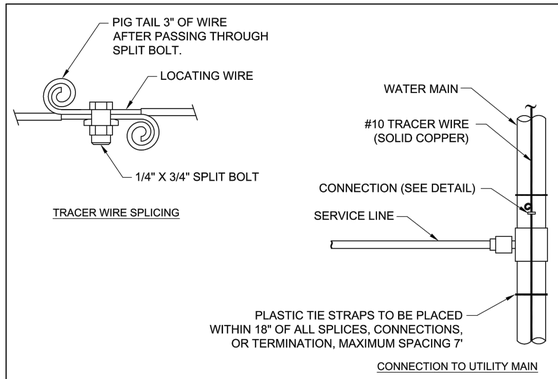

NOTES

1. TRACER WIRE SHALL BE INSTALLED ON ALL UNDERGROUND PVC, DUCTILE IRON, AND HDPE MAIN PIPING.
2. THE TRACER WIRE SHALL BE 10 GAUGE, SINGLE STRAND, UF RATED (DIRECT BURIAL), COPPER WIRE WITH 30 MILLIMETER MINIMUM INSULATION. WHERE HDPE PIPE INSTALLED USING DIRECTIONAL DRILLING THE TRACER WIRE SHALL BE 12 AWG COPPER CLAD CARBON STEEL WITH 30 MILLIMETER MINIMUM INSULATION.
3. THE ENDS OF ALL TRACER WIRES, WHETHER THEY ARE SPLICED, CONNECTED, OR TERMINATED, SHALL HAVE THE LAST THREE INCHES PIG TAILED AS DETAILED HEREON.
4. AFTER INSTALLATION OF THE TRACER WIRE THE SYSTEM SHALL BE SUBJECTED TO TESTING, PRIOR TO BACK FILL, IN ORDER TO ESTABLISH THAT THE SYSTEM IS FUNCTIONAL.
5. THE EXTERNAL COLOR OF THE LOCATE WIRE SHALL FOLLOW THE APWA UNIFORM COLOR CODE AS FOLLOWS:
   RED -------- ELECTRIC
   YELLOW -- GAS
   BLUE ------- POTABLE WATER AND ASSOCIATED LINES
   GREEN ---- SEWER

SCALE: NTS
REVISION BY: J.D.
DATE: 03/20/2017

TRACER WIRE DETAIL

G-06

C:\pw_work\dir\den001\jarez5\d0582435\GENERAL-DETAILS.dwg [G-06] Mar 21, 2017 - 1:43pm

PIPE RESTRAINT TABLE

Pipe Diameter	Horizontal Bend 90°	45°	22.5°	11.25°	Vertical Bend 45° Lower	45° Upper	22.5° Lower	22.5° Upper	11.25° Lower	11.25° Upper	Dead End or Valve
4"	40'	20'	20'	20'	20'	40'	20'	20'	20'	20'	60'
6"	40'	20'	20'	20'	20'	40'	20'	20'	20'	20'	80'
8"	40'	20'	20'	20'	20'	40'	20'	20'	20'	20'	100'
10	60'	20'	20'	20'	20'	60'	20'	40'	20'	20'	120'
12	60'	40'	20'	20'	40'	60'	20'	40'	20'	20'	140'
14	80'	40'	20'	20'	40'	80'	20'	40'	20'	20'	160'
16	80'	40'	20'	20'	40'	80'	20'	40'	20'	20'	180'

PIPE RESTRAINT TABLE (continued)

Pipe Diameter	Tee Run / Branch 4"	6"	8"	10"	12"	14"	16"	Reducer 4"	6"	8"	10"	12"	14"	16"
4"	60'													
6"	40'	80'						40'						
8"	40'	60'	100'					80'	60'					
10"	40'	60'	80'	120'				100'	80'	40'				
12"	40'	60'	80'	100'	140'			120'	100'	80'	40'			
14"	20'	60'	80'	100'	120'	160'		160'	140'	120'	80'	60'		
16"	20'	40'	80'	100'	120'	140'	160'	180'	160'	140'	120'	80'	40'	

THE REQUIRED LENGTH OF PIPE TO BE RESTRAINED IS DEPENDENT ON THE PIPE MATERIAL, PIPE DIAMETER, RESTRAINT MECHANISM, DEPTH OF BURY, TRENCH TYPE, TEST PRESSURE AND SOIL CONDITIONS PRESENT. THE ABOVE TABLES WERE BASED ON THE FOLLOWING CRITERIA:

PIPE MATERIAL: PVC OR DUCTILE IRON
DEPTH OF BURY: 3 FEET
TRENCH TYPE: TYPE 4
TEST PRESSURE: 150 PSI
SOIL CONDITIONS: SW - WELL GRADED SANDS AND GRAVELLY SANDS
SP - POORLY GRADED SANDS AND GRAVELLY SAND MIXTURES
GW - WELL GRADED GRAVELS AND GRAVELLY SAND MIXTURES
ML - INORGANIC SILTS, VERY FINE SANDS, ROCK FLOUR, SILTY OR CLAYEY FINE SANDS
RESTRAINT MECHANISM: EBAA IRON, INC., MEGALUG SERIES 1100
FORD METER BOX, UNI-FLANGE SERIES 1300 OR 1390
SIGMA, PV-LOK
SAFETY FACTOR: 1.5

NOTES:

1. LENGTH SHOWN IN RESTRAINT TABLE REPRESENT MINIMUM RESTRAINT LENGTH.
2. IF PIPE LAYING CONDITIONS VARY FROM THOSE LISTED ABOVE THE ENGINEER SHALL BE RESPONSIBLE FOR PROVIDING PIPE RESTRAINT TABLE TO REFLECT CONSTRUCTION CONDITION.
3. IF POLYETHYLENE ENCASEMENT IS TO BE USED ON DUCTILE IRON PIPE THE ENGINEER SHALL PROVIDE AN UPDATED PIPE RESTRAINT TABLE TO REFLECT THE USE OF POLYETHYLENE ENCASEMENT.
4. IF HDPE PIPE IS USED ALL FITTINGS SHALL BE RESTRAINED OR FUSED.

SCALE: NTS
REVISION BY: J.D.
DATE: 06/07/2016

PIPE RESTRAINT TABLE

G-07

C:\pw_work\dir\den001\jarez5\d0582435\GENERAL-DETAILS.dwg [G-07] Oct 24, 2016 - 5:52pm

NO.	DATE	REVISION	BY	SEAL

ENGR	DR	CHK	APV'D
----	----	----	----

Stantec
STANTEC CERTIFICATE OF AUTHORIZATION #27013
800 PARKWAY DRIVE SUITE 115
DEERFIELD BEACH, FLORIDA 33441-1828
TEL: 954-425-8100
www.stantec.com

The Contractor shall verify and be responsible for all dimensions. DO NOT scale the drawing - any errors or omissions shall be reported to Stantec without delay. The Copyrights to all designs and drawings are the property of Stantec. Reproduction or use for any purpose other than that authorized by Stantec is forbidden.

TRIBAL COMMUNITY DEVELOPMENT

PUBLIC WORKS DEPARTMENT
SEMINOLE TRIBE OF FLORIDA
5700 GRIFFIN RD.
DAVIE, FL 33024
PH (954) 966-6300

REUSE OF DOCUMENTS:

IMMOKALEE SEMINOLE INDIAN RESERVATION
RAW WATER WELL #4 WELLHEAD

NOTES AND DETAILS - I

811 Know what's below. Call before you dig.

BID PLANS

DATE	2023.08
PROJ	17731189
DWG	11189-C-500
SHEET	C-501

DWG PATH: \\Us0231-ppfss01\workgroup\1773\active\17731189 Immokalee Well #4 Phase 2_Design\drawings\civil\11189-C-500.dwg

PLOT DATE: Aug10, 2023 1:26pm

PIPE INSTALLATION PROCEDURES:

1. ALL PIPE IS TO BE LAID IN A CLEAN DRY TRENCH.
2. ALL MUCK AND DESIRABLE MATERIALS ENCOUNTERED IN TRENCH BOTTOM SHALL BE REMOVED AND REPLACED WITH COMPACTED GRANULAR MATERIAL TO 98% OF MAXIMUM DENSITY PER AASHTO T-180.
3. ALL BACKFILL SHALL BE PLACED IN 6 INCH LIFTS AND COMPACTED BY MECHANICAL MEANS TO 98% OF MAXIMUM DENSITY PER AASHTO T-180.
4. UTILITIES CROSSING ROAD RIGHT-OF-WAY SHALL BE INSTALLED PRIOR TO ROAD CONSTRUCTION AND BACKFILLED AND COMPACTED WITHIN RIGHT-OF-WAY LIMITS IN STRICT ACCORDANCE WITH THE DIRECTIONS OF THE EOR AND REQUIREMENTS OF ALL AGENCIES OF JURISDICTION.
5. ALL LINES UNDER CONSTRUCTION SHALL BE PLUGGED AT THE END OF THE WORKING DAY TO PREVENT GROUND WATER AND POTENTIAL CONTAMINANTS FROM ENTERING LINES UNDER CONSTRUCTION. PLUG SHALL BE SECURED TO END OF PIPE TO PREVENT INFILTRATION INTO PIPE.
6. ABOVE GROUND PIPING, INCLUDING BUT NOT LIMITED TO, AERIAL CROSSINGS, LIFT STATION PIPING, FIRE LINES, METER/BACKFLOW PREVENTION DEVICE ASSEMBLIES, ETC. SHALL BE FLANGED AND BE COATED IN ACCORDANCE WITH STOF PWD STANDARDS. DO NOT PAINT OR COAT ANY NAME PLATE DATA.
7. ALL TIE RODS, BOLTS, NUTS, ETC. INSTALLED UNDERGROUND MUST BE COR TEN AND SHALL BE PAINTED WITH SHERWIN WILLIAMS TAR GUARD - COAL TAR EPOXY OR A STOF PWD APPROVED EQUAL. BRASS AND STAINLESS STEEL HARDWARE IS EXEMPT FROM THIS REQUIREMENT.
8. COATINGS AND LININGS DAMAGED DUE TO MISHANDLING OR OTHERWISE, MUST BE REPLACED. COATING AND LININGS DAMAGED DUE TO FIELD CUTTING SHALL BE REPAIRED IN STRICT ACCORDANCE WITH THE MANUFACTURER'S RECOMMENDATIONS. THIS INCLUDES, BUT IS NOT LIMITED TO, CEMENT MORTAR AND POLYETHYLENE PIPE LININGS, PROTECTO 401, GALVANIZED COATINGS, AND OTHER PAINT TYPE COATINGS. SPECIFIC APPROVAL MUST BE OBTAINED FROM STOF PWD PRIOR TO PERFORMING COATING AND LINING REPAIRS.
9. ALL STAINLESS STEEL NUTS, BOLTS AND HARDWARE REFERENCED IN THESE STANDARDS, SHALL BE SS 316 GRADE AND SHALL BE SO STAMPED BY THE MANUFACTURER TO VERIFY ALLOY. THE USE OF ANY OTHER STAINLESS STEEL ALLOY WILL REQUIRE SPECIFIC APPROVAL BY STOF PWD. IN GENERAL, STAINLESS STEEL NUTS, BOLTS AND HARDWARE ARE REQUIRED UNLESS SPECIFICALLY NOTED OTHERWISE. THIS REQUIREMENT ALSO APPLIES TO FLANGE BOLTS AND NUTS ON FLANGED PIPING, MOUNTING BRACKETS, ALL THREAD ROD, ANCHOR BOLTS. ANTI-GALLING COMPOUND ANTI-SEIZE LUBRICANT SHALL BE APPLIED TO THE THREADS OF ALL STAINLESS STEEL BOLTS PRIOR TO INSTALLATION.
10. ALL RUBBER AND SYNTHETIC ELASTOMERIC COMPONENTS OF PRODUCTS THAT COME IN CONTACT WITH POTABLE WATER SHALL BE MANUFACTURED WITH CHLORAMINE RESISTANT ELASTOMERS AND SHALL BEAR NSF APPROVAL.
11. ALL MAINS, INCLUDING FITTINGS, SHALL BE EASILY IDENTIFIABLE AS TO THEIR CONTENTS AND SHALL BE COLOR CODED OR MARKED USING THE UNIVERSAL COLOR CODE OF BLUE FOR WATER, GREEN FOR SEWER AND LAVENDER FOR RECLAIMED. PIPE STRIPED DURING MANUFACTURING OF THE PIPE SHALL HAVE CONTINUOUS STRIPES THAT RUN PARALLEL TO THE AXIS OF THE PIPE, THAT ARE LOCATED AT NO GREATER THAN 90-DEGREE INTERVALS AROUND THE PIPE, AND THAT WILL REMAIN INTACT DURING AND AFTER INSTALLATION OF THE PIPE.
12. MARKING TAPE AND TRACER WIRE SHALL BE INSTALLED WITH ALL UNDERGROUND UTILITES. THE TAPE SHALL BE APPLIED IN A CONTINUOUS LINE THAT RUNS PARALLEL TO THE AXIS OF THE PIPE AND THAT IS LOCATED 12" DIRECTLY ABOVE THE TOP OF THE PIPE.

No.	Date	Revisions	By.
-	-	-	-

SCALE: NTS
REVISION
BY: J.D.
DATE: 03/20/2017

PIPE INSTALLATION PROCEDURES

G-12

C:\pw_work\dir\den001\perez5\d0582435\GENERAL-DETAILS.dwg [G-12] Mar 21, 2017 - 1:43pm

PIPE INSTALLATION PROCEDURES (CONT):

13. IF AN INADVERTENT DISCOVERY OF ARCHEOLOGICAL MATERIALS OR HUMAN REMAINS IS MADE, ALL WORK MUST STOP AND THE DISCOVERY MUST BE REPORTED TO THE TRIBAL HISTORIC PRESERVATION OFFICE (THPO) AT 863-983-6549. IN THE CASE OF DISCOVERY OF HUMAN REMAINS, NOTIFY THE SEMINOLE POLICE DEPARTMENT IMMEDIATELY AT 954-966-6300, THEN CALL THE THPO.
14. DURING ANY ACTIVITY, IF SOIL OR GROUNDWATER CONTAMINATION IS ENCOUNTERED, OR A SPILL OF HAZARDOUS MATERIAL OR OIL/GASOLINE OCCURS, STOP WORK IN THE AREA AND CONTACT THE ENVIRONMENTAL RESOURCE MANAGEMENT DEPARTMENT (ERMD) AT 954-965-4380 OR 863-763-4128 IMMEDIATELY.
15. CONSTRUCTION PERSONNEL INVOLVED ARE REQUIRED TO WATCH THE BEST MANAGEMENT PRACTICES (BMP) VIDEO FOR WILDLIFE PROTECTION. WILDLIFE BROCHURES MUST BE ON HAND DURING CONSTRUCTION AND POSTED ON BULLETIN BOARDS. THE VIDEO AND BROCHURES ARE AVAILABLE FROM ERMD UPON REQUEST AT 863-902-3200 X 13411.
16. A NATIONAL POLLUTANT DISCHARGE ELIMINATION SYSTEM (NPDES) PERMIT FOR STORM WATER DISCHARGES FROM CONSTRUCTION SITES OVER ONE ACRE IS REQUIRED UNDER THE EPA 2017 CONSTRUCTION GENERAL PERMIT ON INDIAN COUNTRY. A STORMWATER POLLUTION PREVENTION PLAN (SWPPP) MUST BE DEVELOPED PRIOR TO SUBMITTING THE NOTICE OF INTENT (NOI). A COMPLETE AND ACCURATE NOI MUST BE SUBMITTED TO THE EPA AT LEAST 14 CALENDAR DAYS PRIOR TO COMMENCING EARTH-DISTURBING ACTIVITIES TO BE ELIGIBLE FOR COVERAGE UNDER THE NPDES PERMIT. THE EPA REQUIRES THE NOI TO BE SUBMITTED ONLINE. INFO IS AVAILABLE AT HTTPS://WWW.EPA.GOV/NPDES/ELECTRONIC-NOTICE-INTENT-ENOI. COPY ERMDREQUEST@SEMTRIBE.COM ON YOUR SUBMITTAL. THE CONTRACTOR IS RESPONSIBLE FOR PREPARATION AND SUBMISSION OF THE REQUIRED NPDES PERMIT APPLICATION, SWPPP, AND NOI.

No.	Date	Revisions	By.
-	-	-	-

SCALE: NTS
REVISION
BY: J.D.
DATE: 03/09/2017

PIPE INSTALLATION PROCEDURES

G-12-1

C:\pw_work\dir\den001\perez5\d0582435\GENERAL-DETAILS.dwg [G-12-1] Mar 21, 2017 - 1:43pm

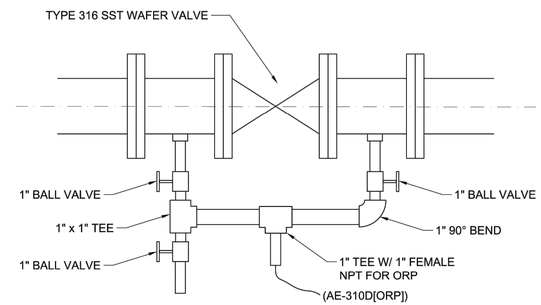

SCALE: NTS
REVISION
BY: J.D.
DATE: 03/20/2017

STAINLESS STEEL PIPING FOR ORP

RW-06

C:\pw_work\dir\den001\perez5\d0582435\RAW-WATER-DETAILS.dwg [RW-06] Mar 21, 2017 - 1:59pm

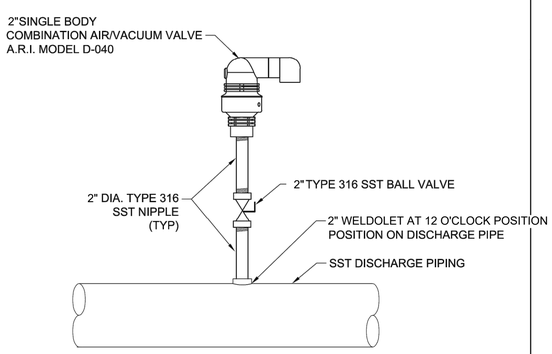

SCALE: NTS
REVISION
BY: J.D.
DATE: 03/20/2017

DISCHARGE PIPING ARV AND PRESSURE MONITORING ASSEMBLY

RW-04

C:\pw_work\dir\den001\perez5\d0582435\RAW-WATER-DETAILS.dwg [RW-04] Mar 21, 2017 - 1:59pm

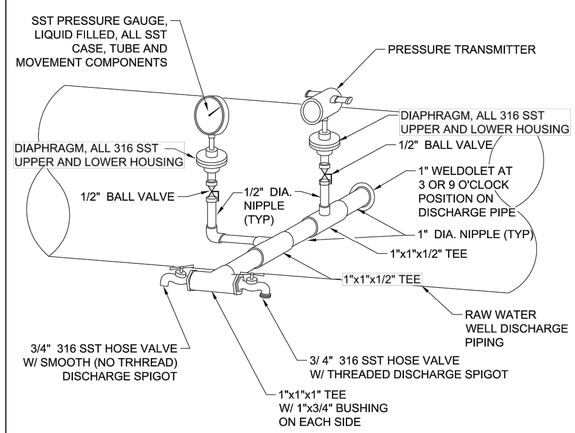

NOTES:

1. ALL VALVES, FITTINGS, PIPING AND COMPONENTS SHALL BE TYPE 316 STAINLESS STEEL.
2. PRESSURE GAUGE MAKE/MODEL: ASHCROFT/SERIES 1009
   BLUE RIBBON/SERIES BR301L
   WINTERS PFQ-LF
3. DIAPHRAGM MAKE/MODEL: ASHCROFT/SERIES 200
   BLUE RIBBON SERIES 1000
   WINTERS D70 #70

SCALE: NTS
REVISION
BY: J.D.
DATE: 03/20/2017

STAINLESS STEEL PIPING FOR BACTERIOLOGICAL AND SDI SAMPLING

RW-05

C:\pw_work\dir\den001\perez5\d0582435\RAW-WATER-DETAILS.dwg [RW-05] Mar 21, 2017 - 1:59pm

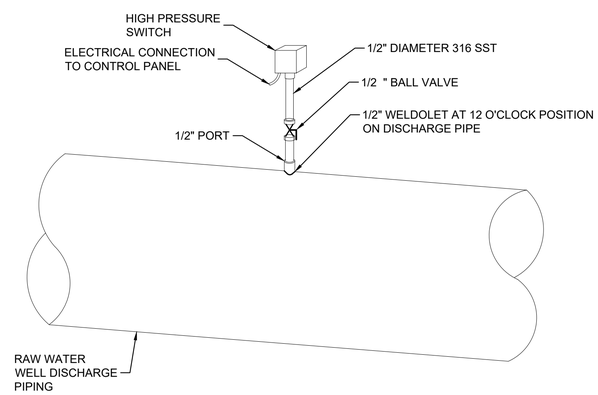

NOTES:

1. ALL VALVES, FITTINGS, PIPING AND COMPONENTS SHALL BE TYPE 316 STAINLESS STEEL.
2. HIGH PRESSURE SWITCH MAKE/MODEL: ASHCROFT/D-SERIES NEMA 4X WATERTIGHT PRESSURE SWITCH

RW-5A HIGH PRESSURE SWITCH DETAIL

BID PLANS

NO.	DATE	REVISION	BY	SEAL

ENGR	DR	CHK	APVD
----	----	----	

Stantec

STANTEC (CERTIFICATE OF AUTHORIZATION #27013)
800 PARWAY DRIVE SUITE 195
DEERFIELD BEACH, FLORIDA 33441-1828
TEL: 954-487-1200
www.stantec.com

The Contractor shall verify and be responsible for all dimensions. DO NOT scale the drawing - any errors or omissions shall be reported to Stantec without delay. Copyright © 2016 Stantec. The Copyrights to all designs and drawings are the property of Stantec. Reproduction or use for any purpose other than that authorized by Stantec is forbidden.

TRIBAL COMMUNITY DEVELOPMENT

PUBLIC WORKS DEPARTMENT
SEMINOLE TRIBE OF FLORIDA
5700 GRIFFIN RD.
DAVIE, FL 33024
PH (954) 966-6300

REUSE OF DOCUMENTS:

IMMOKALEE SEMINOLE INDIAN RESERVATION
RAW WATER WELL #4 WELLHEAD

NOTES AND DETAILS - II

811 Know what's below. Call before you dig.

DATE	2023.08
PROJ	17731189
DWG	11189-C-500
SHEET	C-502

DWG PATH: \\Us0231-ppfss01\workgroup\1773\active\17731189 Immokalee Well #4 Phase 2_Design\drawings\civil\11189-C-500.dwg

PLOT DATE: Aug10, 2023 1:26pm

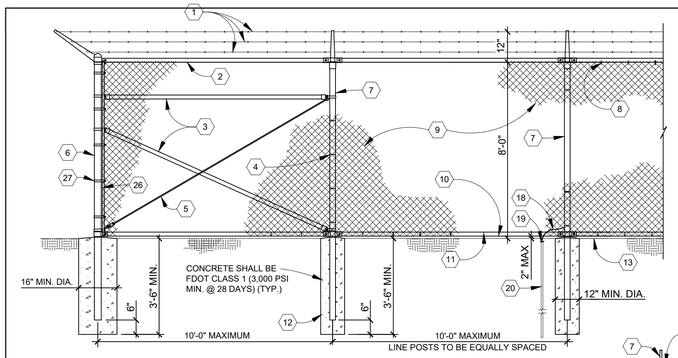

CHAIN-LINK SECURITY FENCE DETAIL
NTS

NOTES:

1. WIRE TIES, RAILS, POSTS, AND BRACES SHALL BE CONSTRUCTED ON THE SECURE SIDE OF THE FENCE ALIGNMENT. CHAIN-LINK FABRIC SHALL BE PLACED ON THE SIDE OPPOSITE THE SECURE AREA.
2. ONLY 9-GAGE GALVANIZED STEEL TIE WIRES SHALL BE USED FOR FASTENING THE FENCE FABRIC TO FENCE POSTS AND RAILS.16-GAGE, STAINLESS STEEL TIE WIRES SHALL BE USED FOR FASTENING FENCE FABRIC TO TENSION WIRES. HOG RINGS SHALL NOT BE ALLOWED ON SENSORED FENCES.
3. TOP AND BOTTOM RAIL SHALL BE ATTACHED TO DOUBLE RAIL ENDS USING 3/8" CARRIAGE BOLTS AS SHOWN. ADDITIONAL HOLES SHALL BE DRILLED THROUGH THE BOTTOM RAIL ENDS TO INSURE THAT CARRIAGE BOLTS PASS THROUGH THE BOTTOM RAIL AS SHOWN.
4. COPPER GROUNDING ROD FOR LIGHTING PROTECTION SHALL BE SIZED AND INSTALLED IN ACCORDANCE WITH NEC (2016) STANDARDS BUT IN NO CASE SMALLER THAN 5/8" DIAMETER OR 10' IN LENGTH. FENCE GROUNDING SHALL BE BONDED TO THE REST OF THE GROUNDING SYSTEM FOR ALL OTHER COMPONENTS WITHIN THE FENCED AREA.
5. SOLID COPPER WIRE GROUNDING WIRE FOR LIGHTING PROTECTION SHALL BE SIZE IN ACCORDANCE WITH NEC (2016) STANDARDS BUT IN NO CASE SMALLER THAN #6 AWG.
6. BRACE AND TRUSS ROD REQUIRED AT GATES AND SIDES OF ALL CORNER POSTS.

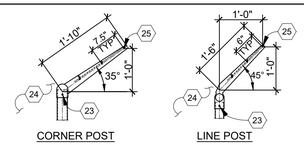

EXTENSION ARM DETAILS
NTS

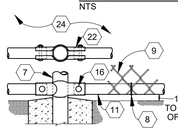

BOTTOM RAIL DETAILS
NTS

TENSION BAND DETAIL
NTS

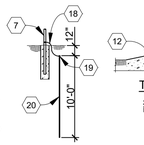

GROUNDING DETAIL
NTS

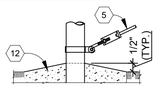

TRUSS ROD AND BAND
NTS

LINE POST ATTACHMENTS
NTS

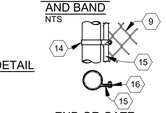

END OR GATE POST DETAIL
NTS

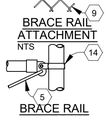

BRACE RAIL ATTACHMENT
NTS

BRACE RAIL CLAMP DETAIL
NTS

KEYED NOTES

1. 3 STRAND BARBED-WIRE
2. TOP RAIL
3. BRACE RAIL
4. 9-GAGE STEEL TIE WIRES, 15" O.C. MAX & W/IN 4" FROM TOP & BOTTOM OF FABRIC
5. TRUSS ROD (3/8" MIN. DIA.)
6. CORNER, END, OR PULL POST
7. LINE POST
8. 9-GAGE STEEL TIE WIRES (TYP.),(12" O.C. MAX.)
9. CHAIN-LINK FABRIC (9 GAGE, 2" MESH)
10. BOTTOM OF FABRIC
11. BOTTOM RAIL
12. CONCRETE BASE
13. GRADE LINE
14. TENSION BAND (15" O.C. MAX. & W/IN 4" FROM TOP & BOTTOM OF FABRIC)
15. TENSION BAR TO ENGAGE EACH FABRIC LINK
16. 3/8" CARRIAGE BOLT W/PEENED THREADS
17. PULL POST
18. SOLID COPPER GROUNDING WIRE
19. MOLDED EXOTHERMIC WELD OR APPROVED CLAMP-TYPE FITTING OF COPPER
20. COPPER-CLAD STEEL GROUND ROD
21. ENDS TWISTED AT LEAST THREE FULL TURNS
22. DOUBLE RAIL END
23. 3/8" PLAIN PIN RIVETED FLUSH (TYP.)
24. SECURE SIDE
25. LOCK PIN, TYP
26. STRETCHER BAND (15" O.C. MAX & W/IN 4" FROM TOP & BOTTOM OF FABRIC)
27. STRETCHER BAR TO ENGAGE EACH FABRIC LINK

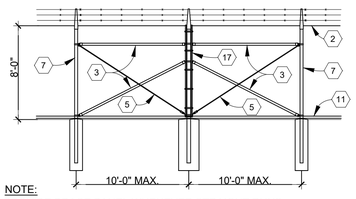

NOTE:
PROVIDE BRACE PANEL WHENEVER STRAIGHT RUNS EXCEED 500 FEET.

BRACE PANEL DETAIL
NTS

STEEL POST SCHEDULE

USE AND SECTION	MIN OUTSIDE DIMENSIONS (NOMINAL)	WEIGHT (LBS. PER FOOT)
CORNER, END & PULL POSTS TUBULAR - ROUND	4.00" O.D.	9.10 LBS/FT.
LINE POSTS TUBULAR - ROUND	2.5" O.D.	5.79 LBS/FT.
TOP & BRACE RAILS TUBULAR - ROUND	1.66" O.D.	2.27 LBS/FT.

SCALE: NTS
REVISION
BY: J.D.
DATE: 03/20/2017

CHAIN LINK SECURITY FENCE DETAIL

G-16

C:\pw_work\dir\den001\jarez5\d0582435\GENERAL-DETAILS.dwg [G-16] Mar 21, 2017 - 1:43pm

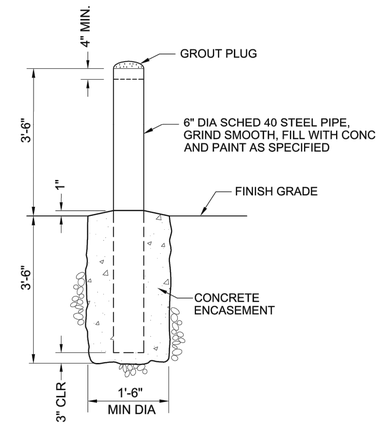

NOTES:

1. GUARD POSTS SHALL BE INSTALLED AT ALL LOCATIONS WHERE VEHICULAR TRAFFIC OR HEAVY EQUIPMENT HAS THE POTENTIAL TO IMPACT ANY FACILITIES AT LIFT STATION.
2. EACH GUARD POST SHALL BE GROUNDED FOR LIGHTNING PROTECTION WITH A SOLID COPPER WIRE SIZED AND INSTALLED IN ACCORDANCE WITH NEC (2016) STANDARDS. BUT IN NO CASE SMALLER THAN #6 AWG. THE GROUNDING WIRE SHALL BE BONDED TO THE REST OF THE GROUNDING SYSTEM FOR ALL OTHER COMPONENTS WITHIN THE PROJECT. IN THE EVENT THAT PIPE GUARDS ARE REMOTE FROM ANY OTHER GROUNDED COMPONENTS, A COPPER GROUNDING ROD SYSTEM SHALL BE ADDED, SIZED AND INSTALLED IN ACCORDANCE WITH NEC (2016) STANDARDS.

SCALE: NTS
REVISION
BY: J.D.
DATE: 03/20/2017

GUARD POST DETAIL

G-15

C:\pw_work\dir\den001\jarez5\d0582435\GENERAL-DETAILS.dwg [G-15] Mar 21, 2017 - 1:43pm

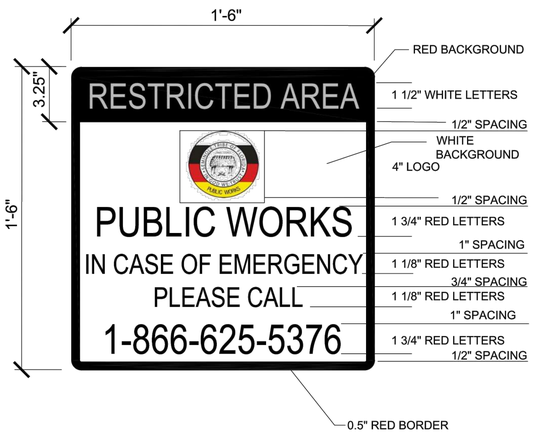

NOTES:

1. SIGNAGE TO BE INSTALLED ON ALL GATES.
2. BOTTOM OF SIGN SHALL INSTALLED AT ELEVATION FOUR (4) FEET ABOVE FINISHED GRADE.
3. ALL SIGNS SHALL BE CONSTRUCTED WITH HIGHLY REFLECTORIZED MATERIAL AS PER THE "MANUAL ON UNIFORM TRAFFIC CONTROL DEVICES".
4. CONTRACTOR MUST SUBMIT LAYOUT SHEET FOR ALL SIGNAGE TO BE APPROVED PRIOR TO FABRICATION.

SCALE: NTS
REVISION
BY: J.D.
DATE: 03/20/2017

PUBLIC WORKS FACILITIES
RESTRICTED AREA SIGNAGE

G-19

C:\pw_work\dir\den001\jarez5\d0582435\GENERAL-DETAILS.dwg [G-19] Mar 21, 2017 - 1:43pm

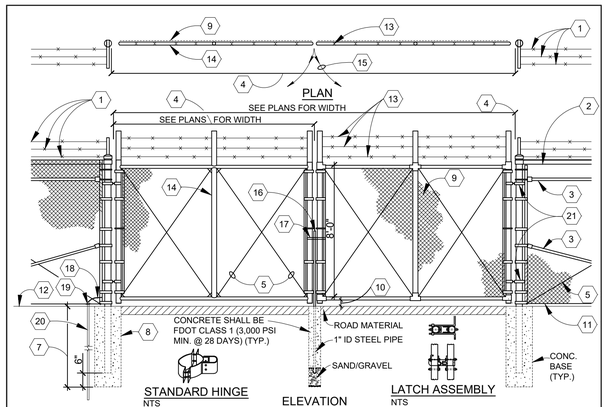

KEYED NOTES

1. 3 STRAND BARBED-WIRE
2. TOP RAIL (TYP)
3. TOP RAIL (TYP)
4. GATE OPENING
5. TRUSS ROD (TYP)
6. LEAF
7. 3'-4" FOR POSTS 6 5/8" O.D.
8. 16" DIA. MIN., GATE POSTS ≤ 4" O. D. 24" DIA., GATE POSTS OVER 4" O.D.
9. CHAIN-LINK FABRIC
10. 2" TYP.
11. BOTTOM TENSION WIRE OR RAIL AS SPECIFIED
12. GRADE LINE
13. 3 STRAND BARBED WIRE
14. GATE FRAME
15. DIRECTION GATE SWING (TYP.)
16. 1/2" DIA DROP ROD, INDUSTRY STND
17. LATCH ASSEMBLY
18. SOLID COPPER GROUNDING WIRE
19. MOLDED EXOTHERMIC WELD OR APPROVED CLAMP-TYPE FITTING OF COPPER
20. COPPER-CLAD STEEL GROUND ROD
21. HINGES (TYP)

NOTES:

1. SWING GATES SHALL BE CONSTRUCTED WITH DROP RODS, PADLOCKS, LATCH ASSEMBLY AND GATE KEEPERS EXCEPT AS NOTED.
2. GATE FRAMES, INCLUDING BRACE RAILS SHALL BE OF WELDED CONSTRUCTION. AT CONTRACTOR'S OPTION A WELDED HORIZONTAL BRACE MAY BE USED IN LIEU OF TRUSS RODS TO BRACE ALL-WELDED GATE FRAMES. THE CONTRACTOR SHALL BE RESPONSIBLE FOR THE PROPER RIGID CONSTRUCTION OF ALL GATES SUPPLIED.
3. COMPLETE AND SUBMIT SHOP DRAWINGS FOR REVIEW AND APPROVAL
4. COPPER GROUNDING ROD FOR LIGHTING PROTECTION SHALL BE SIZED AND INSTALLED IN ACCORDANCE WITH NEC (2016) STANDARDS BUT IN NO CASE SMALLER THAN 5/8" DIAMETER OR 10' IN LENGTH. FENCE GROUNDING SHALL BE BONDED TO THE REST OF THE GROUNDING SYSTEM FOR ALL OTHER COMPONENTS WITHIN THE FENCED AREA.
5. SOLID COPPER WIRE GROUNDING WIRE FOR LIGHTING PROTECTION SHALL BE SIZE IN ACCORDANCE WITH NEC (2016) STANDARDS BUT IN NO CASE SMALLER THAN #6 AWG.
6. A SEPARATE GROUNDING ROD SHALL BE PROVIDED FOR EACH GATE OPENING.

SCALE: NTS
REVISION
BY: J.D.
DATE: 03/20/2017

DOUBLE SWING GATE

G-17

C:\pw_work\dir\den001\jarez5\d0582435\GENERAL-DETAILS.dwg [G-17] Mar 21, 2017 - 1:43pm

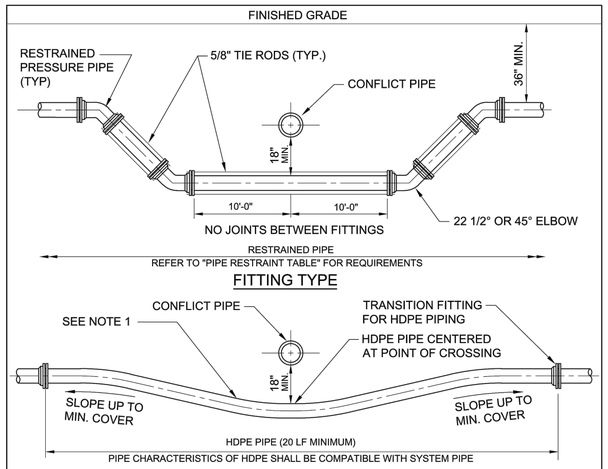

NOTES:

1. A MINIMUM OF 18" VERTICAL SEPARATION BETWEEN WATER MAINS AND STORM SEWERS SHALL BE MAINTAINED. WHERE THIS IS NOT POSSIBLE WATER MAIN SHALL BE D.I.P. WITH NO LESS THAN 6" SEPARATION. THERE SHALL BE IN ALL CASES A MINIMUM OF 18" VERTICAL SEPARATION BETWEEN WATER MAINS AND FORCE MAINS.
2. WHEREVER POSSIBLE WATER MAINS SHALL PASS OVER FORCE MAINS, GRAVITY SEWER OR STORM SEWERS.
3. FITTINGS SHALL BE RESTRIANED WITH RETAINER GLANDS AND TIE RODS. TIE RODS SHALL MATCH DIAMETER OF RETAINER GLAND BOLTS MEETING ASTM A-242 (CORTEN STEEL OR EQUAL) 2 TIE RODS PER JOINT FOR PIPE SIZE 4" - 10" DIAMETER, 4 TIE RODS PER JOINT FOR PIPE SIZE 12" - 16" AND 6 TIE RODS PER JOINT FOR PIPE SIZE 18" - 24".
4. DO NOT EXCEED 50% OF MFG'S RECOMMENDED ALLOWABLE MAXIMUM DEFLECTION.

SCALE: NTS
REVISION
BY: J.D.
DATE: 03/20/2017

PIPE DEFLECTION

G-11

C:\pw_work\dir\den001\jarez5\d0582435\GENERAL-DETAILS.dwg [G-11] Mar 21, 2017 - 1:43pm

NO.	DATE	REVISION	BY	SEAL

ENGR	DR	CHK	APVD
---	---	---	---

Stantec
STANTEC CERTIFICATE OF AUTHORIZATION #27013
800 PARWAY DRIVE SUITE 95
DEERFIELD BEACH, FLORIDA 33441-1828
Tel.+1 954-421-4900
www.stantec.com

The Contractor shall verify and be responsible for all dimensions. DO NOT scale the drawing - any errors or omissions shall be reported to Stantec without delay. The Copyrights to all designs and drawings are the property of Stantec. Reproduction or use for any purpose other than that authorized by Stantec is forbidden.

TRIBAL COMMUNITY DEVELOPMENT
PUBLIC WORKS DEPARTMENT
SEMINOLE TRIBE OF FLORIDA
5700 GRIFFIN RD.
DAVIE, FL 33024
PH (954) 966-6300

REUSE OF DOCUMENTS:

IMMOKALEE SEMINOLE INDIAN RESERVATION
RAW WATER WELL #4 WELLHEAD

NOTES AND DETAILS - III

811 Know what's below. Call before you dig.

BID PLANS

DATE	2023.08
PROJ	17731189
DWG	11189-C-500
SHEET	C-503

DWG PATH: \\Us0231-ppfss01\workgroup\1773\active\17731189 Immokalee Well #4 Phase 2_Design\drawings\civil\11189-C-500.dwg

PLOT DATE: Aug10, 2023 1:26pm

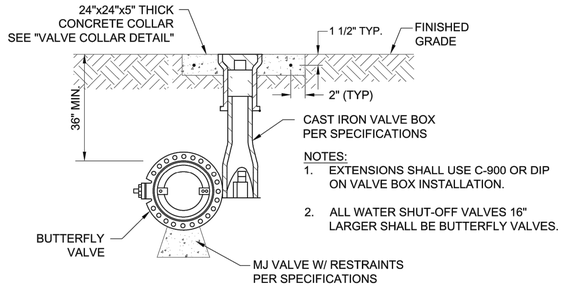

NOTES:
1. EXTENSIONS SHALL USE C-900 OR DIP ON VALVE BOX INSTALLATION.
2. ALL WATER SHUT-OFF VALVES 16" LARGER SHALL BE BUTTERFLY VALVES.

BUTTERFLY VALVE

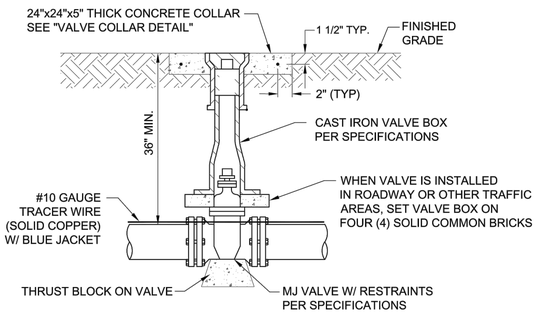

GATE VALVE

SCALE: NTS	VALVE AND VALVE BOX DETAIL
REVISION BY: J.D. DATE: 03/20/2017	W-12

C:\pw_work\dridenl001\perez9\d0582435\WATER-DETAILS.dwg [W-12] Mar 21, 2017 - 2:43pm

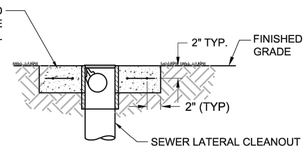

CLEAN OUT

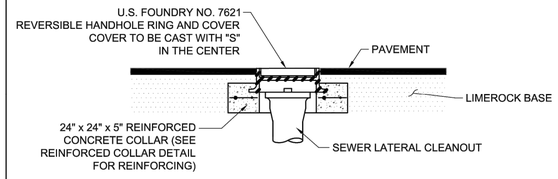

CLEAN OUT W/ BOX IN TRAFFIC AREA

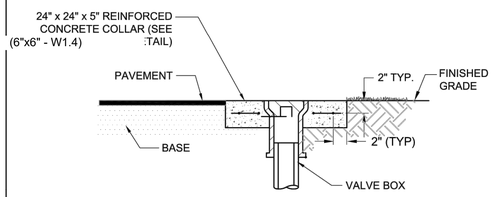

VALVE BOX

SCALE: NTS	CONCRETE COLLAR DETAIL
REVISION BY: J.D. DATE: 03/20/2017	SS-07

C:\pw_work\dridenl001\perez9\d0582435\WASTEWATER-DETAILS.dwg [SS-07] Mar 21, 2017 - 2:20pm

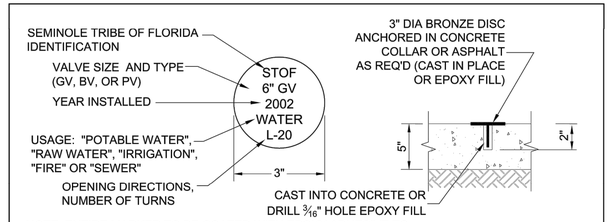

NOTE: ENTIRE MARKER TO BE COATED WITH EPOXY ADHESIVE TO PREVENT TARNISHING (1/16" MIN. DFT).

VALVE IDENTIFICATION MARKERS (TAG)

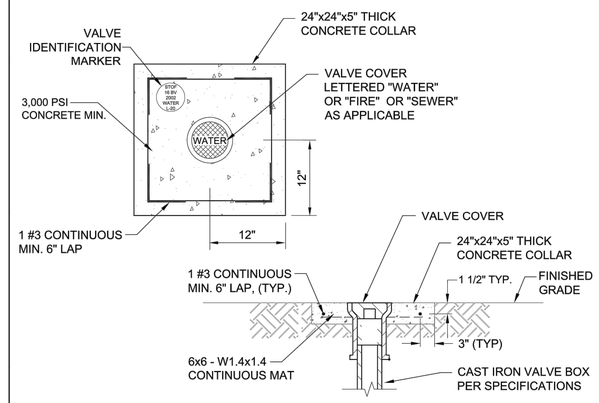

SCALE: NTS	VALVE COLLAR DETAIL
REVISION BY: J.D. DATE: 03/20/2017	G-10

C:\pw_work\dridenl001\perez9\d0582435\GENERAL-DETAILS.dwg [G-10] Mar 21, 2017 - 1:43pm

NOTES:
1. PIPE SUPPORT SHALL BE FABRICATED WITH 316 STAINLESS STEEL.
2. ALL MOUNTING HARDWARE SHALL BE 316 STAINLESS STEEL.
3. MANUFACTURER: B-LINE BY EATON

   TYPE: HEIGHT ADJUSTABLE PIPE SUPPORT CRADLE OR ENGINEER APPROVED EQUAL.
4. CONTRACTOR SHALL COORDINATE PIPE SIZES AND DESIGN WITH MANUFACTURER AND SPECIAL ORDER DUE TO LONG LEAD TIMES.

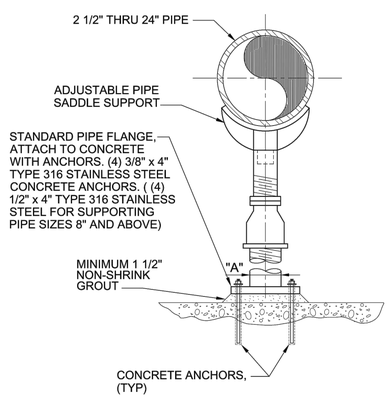

SCALE: NTS	TYPICAL PIPE SUPPORT
REVISION BY: J.D. DATE: 03/20/2017	G-13

C:\pw_work\dridenl001\perez9\d0582435\GENERAL-DETAILS.dwg [G-13] Mar 21, 2017 - 1:43pm

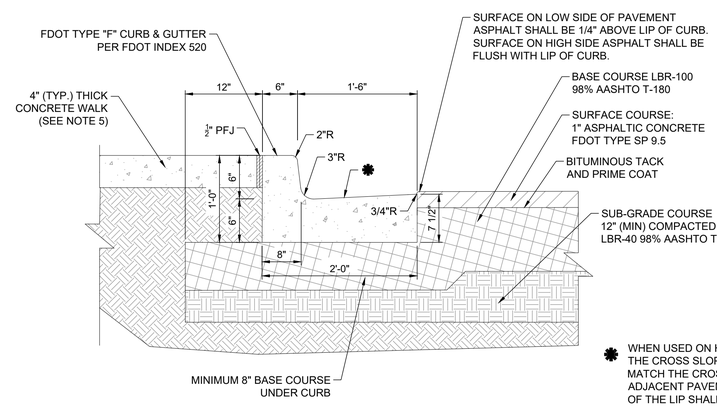

✱ WHEN USED ON HIGH SIDE OF ROADWAYS, THE CROSS SLOPE OF THE GUTTER SHALL MATCH THE CROSS SLOPE OF THE ADJACENT PAVEMENT AND THE THICKNESS OF THE LIP SHALL BE 6 INCHES.

CONCRETE WALKS:

1) ALL CONCRETE SHALL BE 3,000 P.S.I.
2) GROUND IS TO BE COMPACTED PRIOR TO POURING (TOP 8" LBR-100 98% AASHTO T-180).
3) ALL EXPOSED EDGES TO BE CHAMFERED.
4) WHERE CONCRETE WALK DIRECTLY ABUTS PAVEMENT THICKEN TO 6" OVER 3" AND PROVIDE A MINIMUM OF 4" THICK BASE COURSE UNDER THICKENED SIDEWALK EDGE.
5) PROVIDE FIBER MESH REINFORCEMENT, 1.5 POUNDS PER CUBIC YARD.
6) FIBER MESH REINFORCEMENT SHALL BE SYNTHETIC FIBER: MONOFILAMENT POLYPROPYLENE FIBERS COMPLYING WITH ASTM C1116, TYPE III, 1/2 TO 1 1/2 INCHES LONG.
7) CONCRETE SUBJECT TO VEHICULAR TRAFFIC SHALL BE 6 INCHES THICK AND REINFORCED WITH 6"x6" NO. 10 STEEL WIRE MESH FOR THE ENTIRE LENGTH AND WIDTH.

PAVEMENT:

1) CONSTRUCTION SHALL COMPLY WITH FDOT SPECIFICATIONS.

CURB:

1) PROVIDE A MINIMUM OF 8 INCHES OF COMPACTED BASE COURSE UNDER CURB AND EXTENDING A MINIMUM OF 6 INCHES BEYOND BACK OF CURB.
2) CONSTRUCTION SHALL COMPLY WITH FDOT SPECIFICATIONS AND DETAILS ON FDOT INDEX No. 520.

1 / - TYPE "F" CURB

BID PLANS

NO.	DATE	REVISION	BY	APV'D

ENGR	DR	CHK
----	----	----

SEAL

Stantec
STANTEC CERTIFICATE OF AUTHORIZATION #27013
800 PARWAY DRIVE SUITE 195
DEERFIELD BEACH, FLORIDA 33441-1828
Tel: 954-585-1100
www.stantec.com

The Contractor shall verify and be responsible for all dimensions. DO NOT scale the drawing - any errors or omissions shall be reported to Stantec without delay.
The Copyrights to all designs and drawings are the property of Stantec. Reproduction or use for any purpose other than that authorized by Stantec is forbidden.

TRIBAL COMMUNITY DEVELOPMENT
PUBLIC WORKS DEPARTMENT
SEMINOLE TRIBE OF FLORIDA
5700 GRIFFIN RD.
DAVIE, FL 33024
PH (954) 966-6300

REUSE OF DOCUMENTS:

IMMOKALEE SEMINOLE INDIAN RESERVATION
RAW WATER WELL #4 WELLHEAD

NOTES AND DETAILS - IV

Know what's below. Call before you dig.

DATE	2023.08
PROJ	17731189
DWG	11189-C-500
SHEET	C-504

DWG PATH: \\Us0231-ppfss01\workgroup\1773\active\17731189 Immokalee Well #4 Phase 2_Design\drawings\civil\11189-C-500.dwg

PLOT DATE: Aug10, 2023 1:26pm

ATTACHMENT A

EROSION AND SEDIMENT CONTROL GENERAL NOTES:

1. THE FOLLOWING ARE BEST MANAGEMENT PRACTICES (BMP'S) NOTES AND DETAILS ARE ONLY A SUGGESTED APPROACH DEVELOPED FOR USE BY THE CONTRACTOR TO ASSIST THEM IN IMPLEMENTING APPROPRIATE POLLUTION PREVENTION TECHNIQUES TO COMPLY WITH FLORIDA'S NPDES STORMWATER MANAGEMENT DURING CONSTRUCTION ACTIVITY. IT IS THE CONTRACTOR'S RESPONSIBILITY TO DETERMINE AND IMPLEMENT THE BEST MANAGEMENT PRACTICE THAT ARE APPROPRIATE FOR THE PROJECT'S SITE SPECIFIC CONDITIONS DURING THE LIFE OF THE CONSTRUCTION ACTIVITIES.
2. EROSION AND SEDIMENT CONTROL BARRIERS SHALL BE PLACED ADJACENT TO ALL WETLAND AREAS WHERE THERE IS POTENTIAL FOR DOWNSTREAM WATER QUALITY DEGRADATION.
3. ADDITIONAL PROTECTION-ON-SITE PROTECTION MUST BE PROVIDED THAT WILL NOT PERMIT SILT TO LEAVE THE PROJECT CONFINES DUE TO UNFORSEEN CONDITIONS OR ACCIDENTS.
4. THE CONTRACTOR IS RESPONSIBLE FOR AND SHALL COORDINATE WITH STOF PUBLIC WORKS SILT REMOVAL EFFORTS FROM SITE. PRIOR TO REMOVAL IT SHALL BE DETERMINED IF SILT IS NOT REUSABLE ON-SITE.
5. SILT FENCES AND FILTER BARRIERS SHALL BE INSPECTED IMMEDIATELY AFTER EACH RAINFALL AND AT LEAST DAILY DURING PROLONGED RAINFALL. ANY REQUIRED REPAIRS SHALL BE MADE IMMEDIATELY.
6. SHOULD THE FABRIC ON A SILT FENCE OR FILTER BARRIER DECOMPOSE OR BECOME INEFFECTIVE PRIOR TO THE END OF THE EXPECTED USABLE LIFE AND THE BARRIER IS STILL NECESSARY, THE FABRIC SHALL BE REPLACED PROMPTLY.
7. ALL DISTURBED AREAS SHALL BE GRASSED, FERTILIZED, MULCHED AND MAINTAINED UNTIL A PERMANENT VEGETATIVE COVER IS ESTABLISHED.
8. CONTRACTOR SHALL INSURE THAT ALL DRAINAGE STRUCTURES, PIPES, ETC., ARE CLEANED OUT AND WORKING PROPERLY AT TIME OF ACCEPTANCE.
9. THE SITE CONTRACTOR IS RESPONSIBLE FOR REMOVING THE TEMPORARY EROSION AND SEDIMENT CONTROL DEVICES AFTER COMPLETION OF CONSTRUCTION AND ONLY WHEN AREAS HAVE BEEN STABILIZED.
10. THE COST OF STORM WATER EROSION CONTROL SHALL BE CONSIDERED INCIDENTAL TO THE CONTRACT AND NO SEPARATE PAYMENT SHALL BE ALLOWED.
11. UPON COMPLETION OF CONSTRUCTION THE CONTRACTOR, AT NO COST TO OWNER, SHALL BE RESPONSIBLE FOR RESTORING ALL AREAS WHERE EROSION CONTROL DEVICES WERE PROVIDED. RESTORATION EFFORTS SHALL LEAVE SITE IN AS GOOD AS, IF NOT BETTER CONDITION THAN WHAT EXISTED PRIOR TO CONSTRUCTION.

SCALE: NTS REVISION BY: J.D. DATE: 03/20/2017	EROSION AND SEDIMENT CONTROL GENERAL NOTES (SHEET 1 of 7)	G-01-1

C:\pw_work\dr\den001\jenez5\d0582435\GENERAL-DETAILS.dwg [G-01-1] Mar 21, 2017 - 1:43pm

EROSION AND SEDIMENT CONTROL GENERAL NOTES (CONT):

12. IF AN INADVERTENT DISCOVERY OF ARCHEOLOGICAL MATERIALS OR HUMAN REMAINS IS MADE, ALL WORK MUST STOP AND THE DISCOVERY MUST BE REPORTED TO THE TRIBAL HISTORIC PRESERVATION OFFICE (THPO) AT 863-983-6549. IN THE CASE OF DISCOVERY OF HUMAN REMAINS, NOTIFY THE SEMINOLE POLICE DEPARTMENT IMMEDIATELY AT 954-966-6300, THEN CALL THE THPO.
13. DURING ANY ACTIVITY, IF SOIL OR GROUNDWATER CONTAMINATION IS ENCOUNTERED, OR A SPILL OF HAZARDOUS MATERIAL OR OIL/GASOLINE OCCURS, STOP WORK IN THE AREA AND CONTACT THE ENVIRONMENTAL RESOURCE MANAGEMENT DEPARTMENT (ERMD) AT 954-965-4380 OR 863-763-4128 IMMEDIATELY.
14. CONSTRUCTION PERSONNEL INVOLVED ARE REQUIRED TO WATCH THE BEST MANAGEMENT PRACTICES (BMP) VIDEO FOR WILDLIFE PROTECTION. WILDLIFE BROCHURES MUST BE ON HAND DURING CONSTRUCTION AND POSTED ON BULLETIN BOARDS. THE VIDEO AND BROCHURES ARE AVAILABLE FROM ERMD UPON REQUEST AT 863-902-3200 X 13411.
15. A NATIONAL POLLUTANT DISCHARGE ELIMINATION SYSTEM (NPDES) PERMIT FOR STORM WATER DISCHARGES FROM CONSTRUCTION SITES OVER ONE ACRE IS REQUIRED UNDER THE EPA 2017 CONSTRUCTION GENERAL PERMIT ON INDIAN COUNTRY. A STORMWATER POLLUTION PREVENTION PLAN (SWPPP) MUST BE DEVELOPED PRIOR TO SUBMITTING THE NOTICE OF INTENT (NOI). A COMPLETE AND ACCURATE NOI MUST BE SUBMITTED TO THE EPA AT LEAST 14 CALENDAR DAYS PRIOR TO COMMENCING EARTH-DISTURBING ACTIVITIES TO BE ELIGIBLE FOR COVERAGE UNDER THE NPDES PERMIT. THE EPA REQUIRES THE NOI TO BE SUBMITTED ONLINE. INFO IS AVAILABLE AT HTTPS://WWW.EPA.GOV/NPDES/ELECTRONIC-NOTICE-INTENT-ENOI. COPY ERMDREQUEST@SEMTRIBE.COM ON YOUR SUBMITTAL. THE CONTRACTOR IS RESPONSIBLE FOR PREPARATION AND SUBMISSION OF THE REQUIRED NPDES PERMIT APPLICATION, SWPPP, AND NOI.

SCALE: NTS REVISION BY: J.D. DATE: 03/20/2017	EROSION AND SEDIMENT CONTROL GENERAL NOTES (SHEET 2 of 7)	G-01-2

C:\pw_work\dr\den001\jenez5\d0582435\GENERAL-DETAILS.dwg [G-01-2] Mar 21, 2017 - 1:43pm

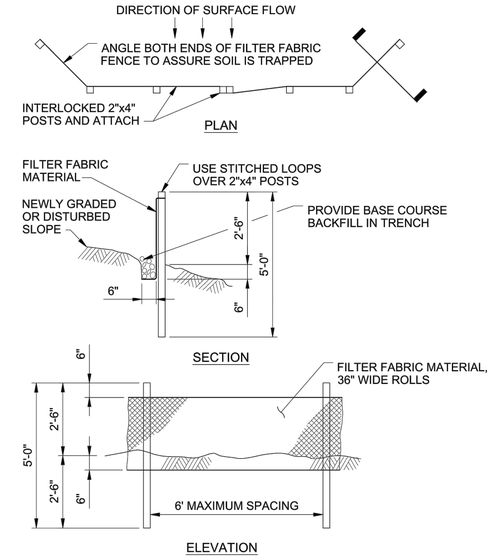

NOTES:

1. BURY BOTTOM OF FILTER FABRIC 6" VERTICALLY BELOW FINISHED GRADE.
2. 2"x4" TIMBER FIR OR STEEL FENCE POSTS.
3. STITCHED LOOPS TO BE INSTALLED DOWNHILL SIDE OF SLOPE.
4. COMPACT ALL AREAS OF FILTER FABRIC TRENCH.

SCALE: NTS REVISION BY: J.D. DATE: 03/20/2017	SEDIMENT FENCE (SHEET 3 of 7)	G-01-3

C:\pw_work\dr\den001\jenez5\d0582435\GENERAL-DETAILS.dwg [G-01-3] Mar 21, 2017 - 1:43pm

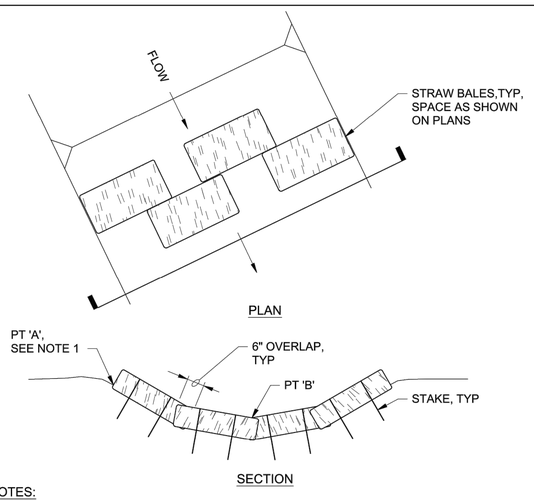

NOTES:

1. POINT 'A' MUST BE 6" MINIMUM HIGHER THAN PT 'B'.
2. STAKING OF BALES IS REQUIRED USING (2)2"x2"x3' LONG WOOD STAKES OR APPROVED EQUAL PER BALE.
3. DRIVE STAKES MINIMUM 12" INTO GROUND AND FLUSH WITH TOP OF BALES.
4. EMBED BALES MINIMUM OF 4" INTO GROUND SURFACE.
5. BIOFILTER BAGS TO BE USED, IF SPECIFIED.
6. BALES SHALL BE EITHER WIRE-BOUND OR STRING-TIED WITH THE BINDINGS ORIENTED AROUND THE SIDES RATHER THAN OVER AND UNDER THE BALES.

SCALE: NTS REVISION BY: J.D. DATE: 03/20/2017	STRAW BALE IN DITCHES (SHEET 4 of 7)	G-01-4

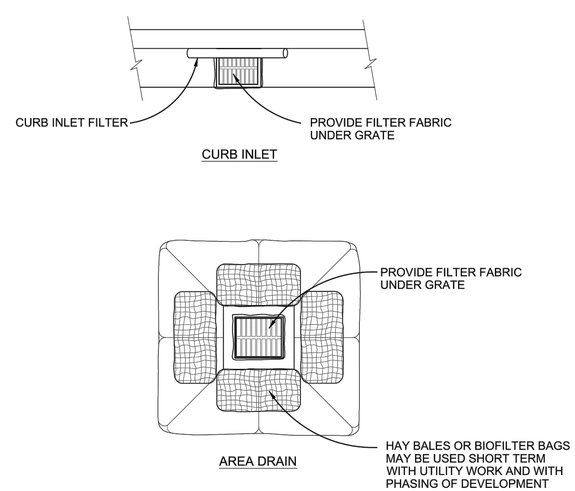

SCALE: NTS REVISION BY: J.D. DATE: 03/20/2017	DRAINAGE INLET BARRIER (SHEET 6 of 7)	G-01-6

BID PLANS

NO.	DATE	REVISION	BY	SEAL

ENGR ---- DR ---- CHK ---- APVD

Stantec
STANTEC CERTIFICATE OF AUTHORIZATION #27013
800 PARKWAY DRIVE SUITE 195
DEERFIELD BEACH, FLORIDA 33441-1828
TEL: 954-487-1300
www.stantec.com

The Contractor shall verify and be responsible for all dimensions. DO NOT scale the drawing - any errors or omissions shall be reported to Stantec without delay.
The Copyrights to all designs and drawings are the property of Stantec. Reproduction or use for any purpose other than that authorized by Stantec is forbidden.

TRIBAL COMMUNITY DEVELOPMENT
PUBLIC WORKS DEPARTMENT
SEMINOLE TRIBE OF FLORIDA
5700 GRIFFIN RD.
DAVIE, FL 33024
PH (954) 966-6300

REUSE OF DOCUMENTS:

IMMOKALEE SEMINOLE INDIAN RESERVATION
RAW WATER WELL #4 WELLHEAD

EROSION AND SEDIMENT CONTROL NOTES AND DETAILS - I

811 Know what's below. Call before you dig.

DATE	2023.08
PROJ	17731189
DWG	11189-C-500
SHEET	C-505

DWG PATH: \\Us0231-ppfss01\workgroup\1773\active\17731189 Immokalee Well #4 Phase 2_Design\drawings\civil\11189-C-500.dwg

PLOT DATE: Aug10, 2023 1:27pm

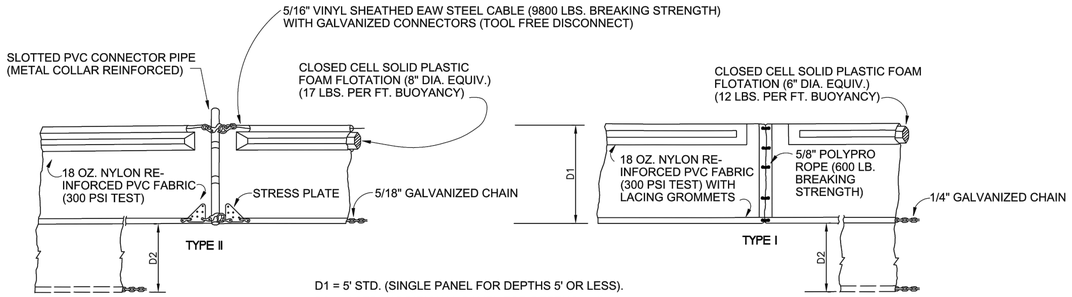

D1 = 5' STD. (SINGLE PANEL FOR DEPTHS 5' OR LESS).
D2 = 5' STD. (ADDITIONAL PANEL FOR DEPTHS > 5').
CURTAIN TO REACH BOTTOM UP TO DEPTHS OF 10 FEET.
TWO (2) PANELS TO BE USED FOR DEPTHS GREATER THAN
10 FEET UNLESS SPECIAL DEPTH CURTAINS SPECIFICALLY
CALLED FOR IN THE PLANS OR AS DETERMINED BY THE ENGINEER.

NOTES:
1. COMPONENTS OF TYPES I AND II MAY BE SIMILAR OR IDENTICAL TO PROPRIETARY DESIGNS. ANY INFRINGEMENT ON THE PROPRIETARY RIGHTS OF THE DESIGNER SHALL BE THE SOLE RESPONSIBILITY OF THE USER. SUBSTITUTIONS FOR TYPES I AND II SHALL BE AS APPROVED BY THE ENGINEER.
2. THE CONTRACTOR SHALL BE RESPONSIBLE FOR DEVELOPING AN ANCHOR PLAN WITH CONSIDERATION GIVEN TO DESIRED SHAPE, WIND AND CURRENT CONDITIONS. THE BARRIER SHALL BE ANCHORED TO BOTH SIDES.
3. WHILE IN SERVICE THE TURBIDITY BARRIER SHALL BE INSPECTED ON A REGULAR BASIS.

SCALE: NTS	FLOATING TURBIDITY BARRIER (Sheet 7 of 7)
REVISION BY: J.D.	
DATE: 03/20/2017	G-01-7

C:\pw_work\dr\den001\jenes\d0582435\GENERAL-DETAILS.dwg [G-01-7] Mar 21, 2017 - 1:43pm

NO.	DATE	REVISION	BY

SEAL

ENGR	DR	CHK	APVD
----	----	----	

Stantec
STANTEC (CERTIFICATE OF AUTHORIZATION #27013)
800 PARKWAY DRIVE SUITE 195
DEERFIELD BEACH, FLORIDA 33441-1828
TEL: (954) 487-1200
www.stantec.com

The Contractor shall verify and be responsible for all dimensions. DO NOT scale the drawing - any errors or omissions shall be reported to the Engineer-of-Record immediately.
The Copyrights to all designs and drawings are the property of Stantec. Reproduction or use for any purpose other than that authorized by Stantec is forbidden.

TRIBAL COMMUNITY DEVELOPMENT
PUBLIC WORKS DEPARTMENT
SEMINOLE TRIBE OF FLORIDA
5700 GRIFFIN RD.
DAVIE, FL 33024
PH (954) 966-6300

REUSE OF DOCUMENTS:

IMMOKALEE SEMINOLE INDIAN RESERVATION
RAW WATER WELL #4 WELLHEAD

EROSION AND SEDIMENT CONTROL NOTES AND DETAILS - II

811 Know what's below. Call before you dig.

DATE	2023.08
PROJ	17731189
DWG	11189-C-500
SHEET	C-506

BID PLANS

DWG PATH: \\Us0231-ppfss01\workgroup\1773\active\17731189 Immokalee Well #4 Phase 2_Design\drawings\civil\11189-C-500.dwg

PLOT DATE: Aug10, 2023 1:27pm

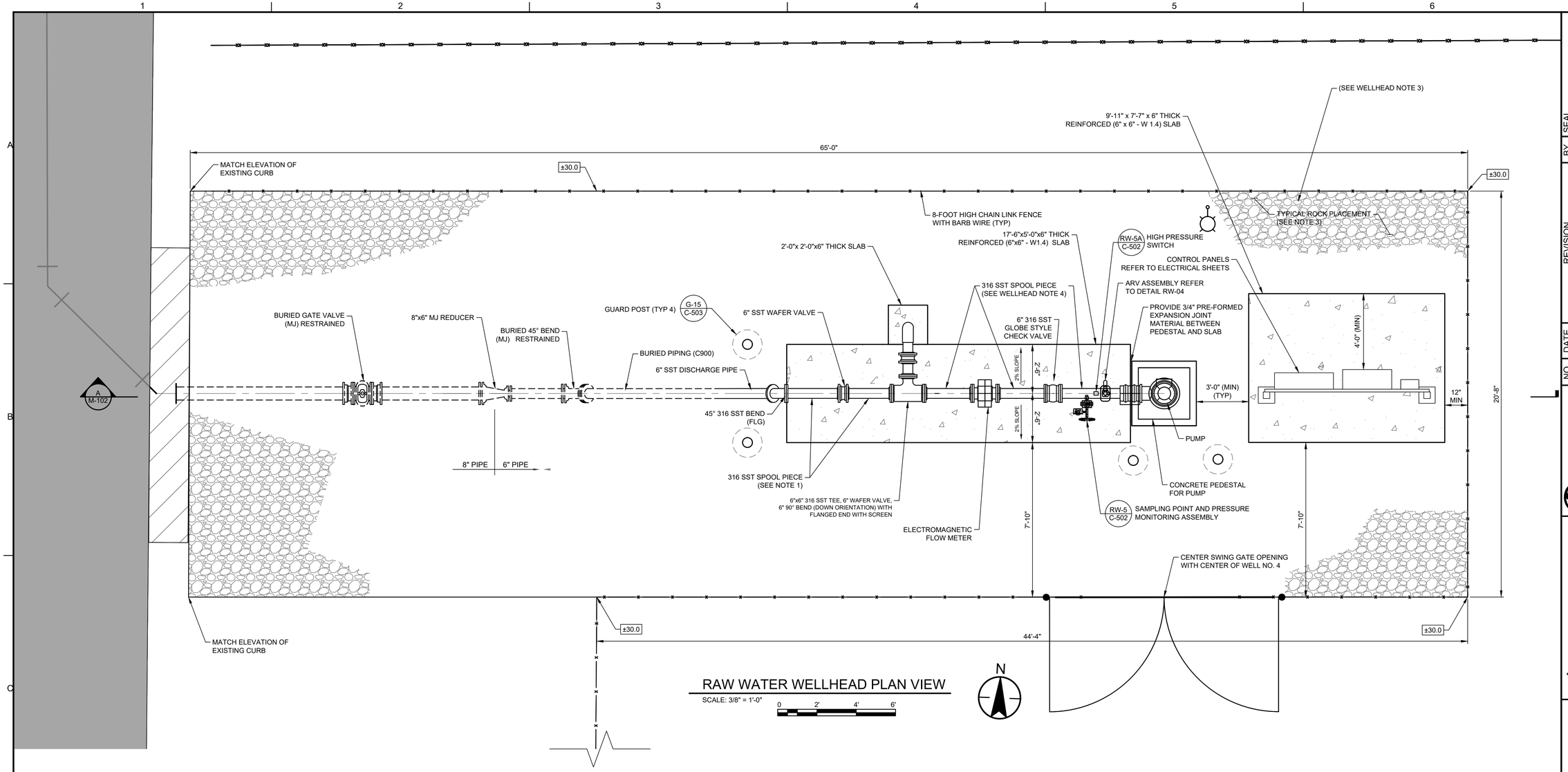

RAW WATER WELLHEAD PLAN VIEW

SCALE: 3/8" = 1'-0"

0 2' 4' 6'

RAW WATER NOTES:

1. ALL RAW WATER MAIN PIPE, INCLUDING FITTINGS SHALL BE COLOR CODED OR MARKED USING OLIVE GREEN AS A PREDOMINATE COLOR TO DIFFERENTIATE RAW WATER FROM POTABLE, RECLAIMED, OR OTHER WATER. TAPE IS USED TO MARK PIPE DURING INSTALLATION. THE TAPE SHALL BE APPLIED IN A CONTINUOUS LINE 12 INCHES DIRECTLY ABOVE THE CENTERLINE OF THE PIPE.
2. DEPTH OF WATER LINES FROM CROWN OF PIPE TO FINISHED GRADE SHALL BE A MINIMUM OF 36 INCHES AND A MAXIMUM OF 48 INCHES. EXCEPTIONS MAY BE MADE FOR CONFLICT CROSSINGS WITH STOF WRITTEN APPROVAL ON A CASE BY CASE BASIS.
3. RAW WATER MAINS TO BE LOCATED A MINIMUM OF 3 FEET FROM RIGHT OF WAY, UNLESS OTHERWISE NOTED ON PLANS.
4. UNDER NO CIRCUMSTANCES SHALL VALVES ON ACTIVE EXISTING LINES BE OPERATED WITHOUT AN AUTHORIZED STOF PWD REPRESENTATIVE PRESENT.
5. THE RAW WATER LINE SHALL NOT BE PUT INTO OPERATION UNTIL ALL COMPONENTS HAVE BEEN APPROVED BY THE STOF PWD AND ALL GOVERNING AGENCIES.
6. IF AN INADVERTENT DISCOVERY OF ARCHEOLOGICAL MATERIALS OR HUMAN REMAINS IS MADE, ALL WORK MUST STOP AND THE DISCOVERY REPORTED TO THE TRIBAL HISTORIC PRESERVATION OFFICE (THPO) AT 863-983-6549. IN THE CASE OF DISCOVERY OF HUMAN REMAINS, NOTIFY THE SEMINOLE POLICE DEPARTMENT IMMEDIATELY AT 954-966-6300, THEN CALL THE THPO.
7. DURING ANY ACTIVITY, IF SOIL OR GROUNDWATER CONTAMINATION IS ENCOUNTERED, OR SPILL OF HAZARDOUS MATERIAL OR OIL/GASOLINE OCCURS, STOP WORK IN THE AREA AND CONTACT THE ENVIRONMENTAL RESOURCE MANAGEMENT DEPARTMENT (ERMD) AT 954-965-4380 OR 863-763-4128 IMMEDIATELY.
8. CONSTRUCTION PERSONNEL INVOLVED ARE REQUIRED TO WATCH THE BEST MANAGEMENT PRACTICES (BMP) VIDEO FOR WILDLIFE PROTECTION. WILDLIFE BROCHURES MUST BE ON HAND DURING CONSTRUCTION AND POSTED ON BULLETIN BOARDS. THE VIDEO AND BROCHURES ARE AVAILABLE FROM ERMD UPON REQUEST AT 863-902-3200 X 13411.
9. A NATIONAL POLLUTANT DISCHARGE ELIMINATION SYSTEM (NPDES) PERMIT FOR STORMWATER DISCHARGES FROM CONSTRUCTION SITES OVER ONE ACRE IS REQUIRED UNDER THE EPA 2017 CONSTRUCTION GENERAL PERMIT ON INDIAN COUNTRY. A STORMWATER POLLUTION PREVENTION PLAN (SWPPP) MUST BE DEVELOPED PRIOR TO SUBMITTING THE NOTICE OF INTENT (NOI). A COMPLETE AND ACCURATE NOI MUST BE SUBMITTED TO THE EPA AT LEAST 14 CALENDAR DAYS PRIOR TO COMMENCING EARTH-DISTURBING ACTIVITIES TO BE ELIGIBLE FOR COVERAGE UNDER THE NPDES PERMIT. THE EPA REQUIRES THE NOI TO BE SUBMITTED ONLINE. INFO IS AVAILABLE AT HTTPS://WWW.EPA.GOV/NPDES/ELECTRONIC-NOTICE-INTENT-ENOI. COPY ERMDREQUEST@SEMTRIBE.COM ON YOUR SUBMITTAL. THE CONTRACTOR IS RESPONSIBLE FOR PREPARATION AND SUBMISSION OF THE REQUIRED NPDES PERMIT APPLICATION, SWPPP, AND NOI.
10. ALL RAW WATER MAINS SHALL BE FLUSHED, DISINFECTED, AND BACTERIOLOGICALY SAMPLED IN ACCORDANCE WITH AWWA C651-14, PRIOR TO MAKING THE FINAL CONNECTION TO THE EXISTING RAW WATER SYSTEM ON THE WATER TREATMENT PLANT SITE. FOLLOWING FLUSHING, DISINFECTION, AND APPROVAL OF BACTERIOLOGICAL SAMPLES, THE RAW WATER LINES SHALL BE THOROUGHLY FLUSHED OF ALL CHLORINATED WATER PRIOR TO MAKING THE FINAL CONNECTION TO THE EXISTING RAW WATER SYSTEM.
11. THE CONTRACTOR SHALL DEMONSTRATE THAT THE RAW FLUSHING WATER FROM THE WELLS TO THE DISCHARGE POINT HAS A TOTAL CHLORINE RESIDUAL LESS THAN 0.1 mg/L BEFORE MAKING THE FINAL CONNECTION TO THE EXISTING RAW WATER SYSTEM.

WELLHEAD AND DISCHARGE PIPING NOTES:

1. ALL ABOVE GROUND PIPING AND VALVES SHALL CONSIST OF TYPE 316 STAINLESS STEEL, SIZE PIPING DIAMETER.
2. ALL MECHANICAL JOINT (MJ) PIPING SHALL BE RESTRAINED JOINT.
3. NO. 57 ROCK FILL SHALL BE INSTALLED WITHIN FENCED AREA AND 1-FOOT BEYOND PERIMETER OF FENCING. MINIMUM THICKNESS OF ROCK LAYER SHALL BE 6" PLACED OVER MIRAFI FILTER FABRIC.
4. PIPE SPOOL PIECE DIMENSIONS AS REQUIRED TO MEET FLOW METER REQUIREMENTS OF 5 DIAMETERS UPSTREAM, 3 DIAMETERS DOWNSTREAM.
5. EQUIPMENT DISCHARGE HEAD WITH THREE 1-1 1/2" DIAMETER PORTS TO ACCOMMODATE PIPING FOR PRESSURE TRANSMITTER, SS-AIRLINE, AND MANUAL WATER LEVEL TUBE.
6. MOUNT SUN SHIELDING ON TOP OF CONTROL PANEL, MOTOR CONTROL CENTER, TRANSMITTERS AND OTHER UTILITY BOXES.
7. IT IS PREFERABLE WHEN CONFIGURING SITE LAYOUT TO HAVE THE CONTROL PANELS FACING NORTH.

BID PLANS

NO.	DATE	REVISION	BY	APVD

SEAL

ENGR	DR	CHK
ORB	ML	ORB

Stantec
STANTEC (CERTIFICATE OF AUTHORIZATION #27013)
800 PARKWAY DRIVE SUITE 195
DEERFIELD BEACH, FLORIDA 33441-1828
TEL: 954-585-1100
www.stantec.com

The Contractor shall verify and be responsible for all dimensions. DO NOT scale the drawing - any errors or omissions shall be reported to Stantec without delay.
The Copyright to all designs and drawings are the property of Stantec. Reproduction or use for any purpose other than that authorized by Stantec is forbidden.

TRIBAL COMMUNITY DEVELOPMENT
PUBLIC WORKS DEPARTMENT
SEMINOLE TRIBE OF FLORIDA
5700 GRIFFIN RD.
DAVIE, FL 33024
PH (954) 966-6300

REUSE OF DOCUMENTS:

IMMOKALEE SEMINOLE INDIAN RESERVATION
RAW WATER WELL #4 WELLHEAD

RAW WATER WELLHEAD PLAN

811 Know what's below. Call before you dig.

DATE	2023.08
PROJ	17731189
DWG	1189-m-101
SHEET	M-101

ATTACHMENT A

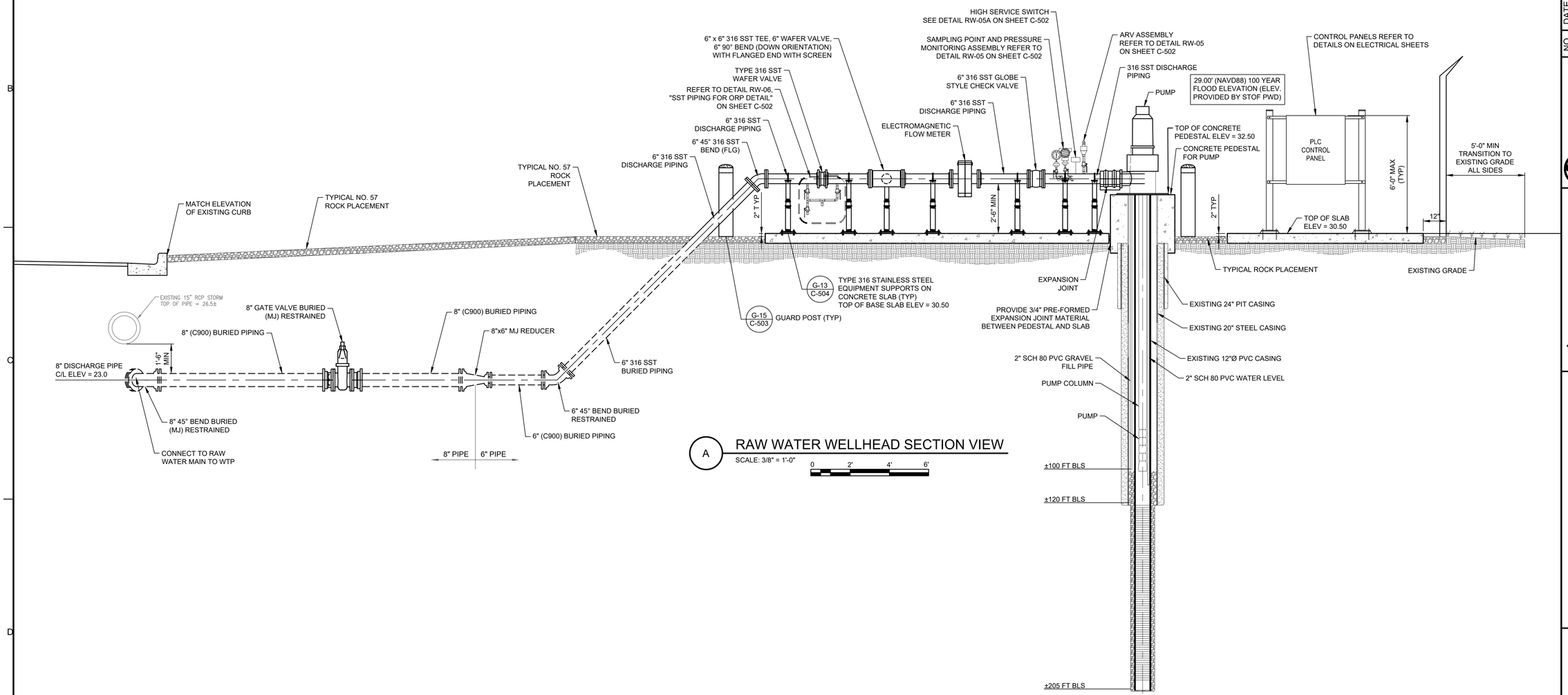

A RAW WATER WELLHEAD SECTION VIEW

SCALE: 3/8" = 1'-0"

0 2' 4' 6'

BID PLANS

NO.	DATE	REVISION	BY	SEAL

ENGR	DR	CHK	APVD
ORB	ML	ORB	

Stantec

STANTEC (CERTIFICATE OF AUTHORIZATION #27013)
800 PARKWAY DRIVE SUITE 195
DEERFIELD BEACH, FLORIDA 33441-1828
TEL: (954) 545-1500
www.stantec.com

The Contractor shall verify and be responsible for all dimensions. DO NOT scale the drawing - any errors or omissions shall be reported to the Stantec Project Manager immediately. The Copyright to all designs and drawings are the property of Stantec. Reproduction or use for any purpose other than that authorized by Stantec is forbidden.

TRIBAL COMMUNITY DEVELOPMENT

PUBLIC WORKS DEPARTMENT
SEMINOLE TRIBE OF FLORIDA
5700 GRIFFIN RD.
DAVIE, FL 33024
PH (954) 966-6300

REUSE OF DOCUMENTS:

IMMOKALEE SEMINOLE INDIAN RESERVATION
RAW WATER WELL #4 WELLHEAD

RAW WATER WELLHEAD SECTION

811 Know what's below. Call before you dig.

DATE	2023.08
PROJ	17731189
DWG	1189-m-102
SHEET	M-102

DWG PATH: \\Us0231-ppfss01\workgroup\1773\active\17731189 Immokalee Well #4 Phase 2_Design\drawings\mechanical-process\1189-m-102.dwgPLOT DATE: Aug11, 2023 3:44pm

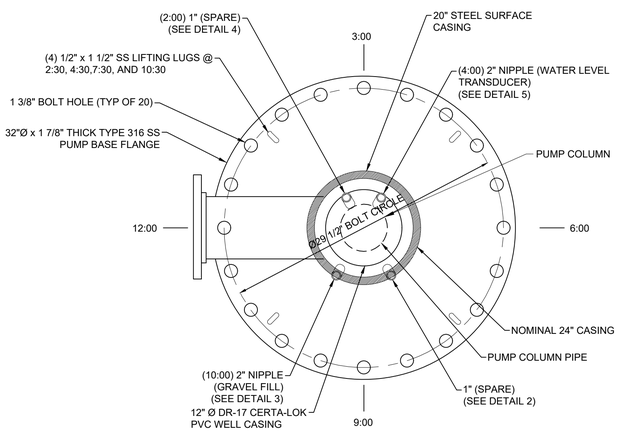

PLAN

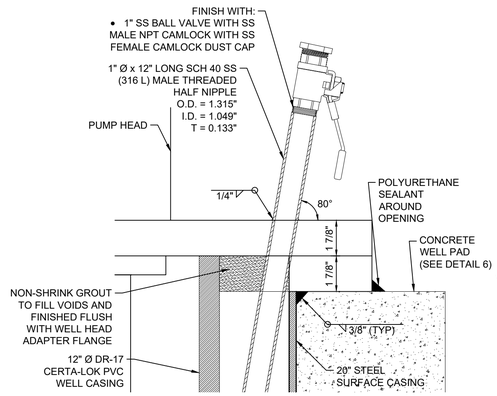

2 1–INCH NIPPLE (SPARE) (8:00 POSITION)

SCALE: NTS

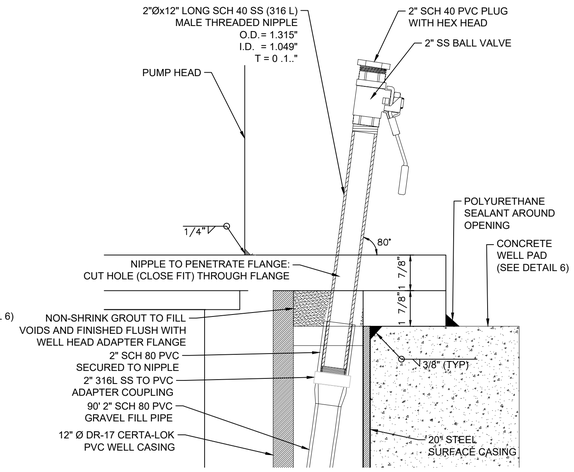

3 2–INCH NIPPLE (10:00 POSITION)

SCALE: NTS

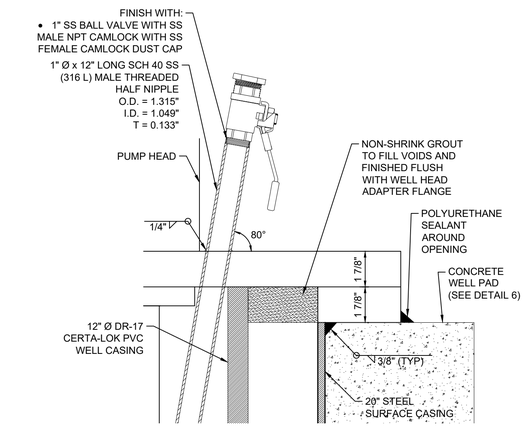

4 1–INCH NIPPLE (SPARE) (2:00 POSITION)

SCALE: NTS

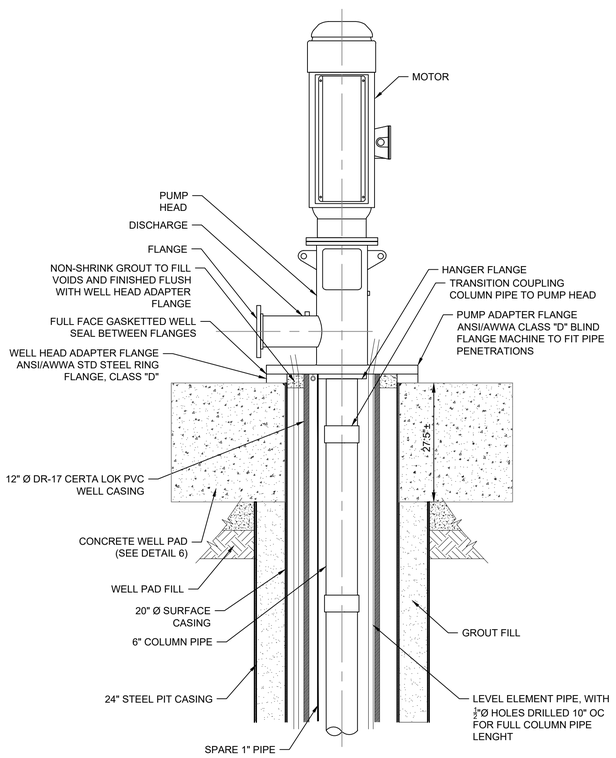

SECTION

1 WELLHEAD

SCALE: NTS

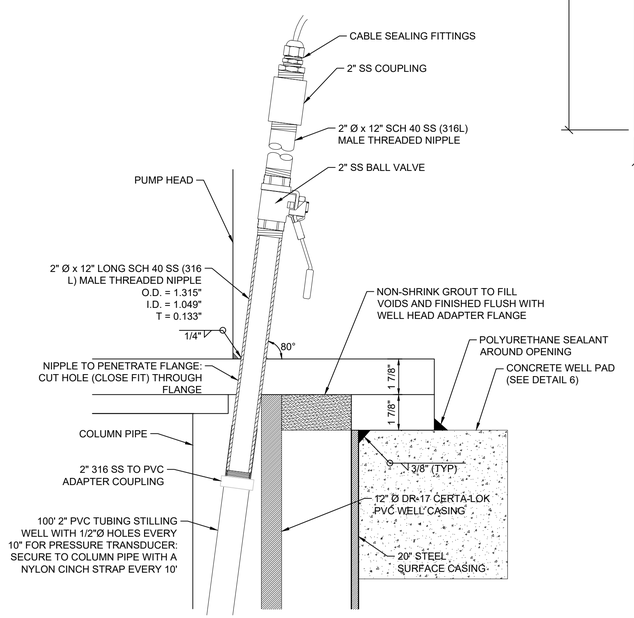

5 2–INCH NIPPLE (4:00 POSITION)

SCALE: NTS

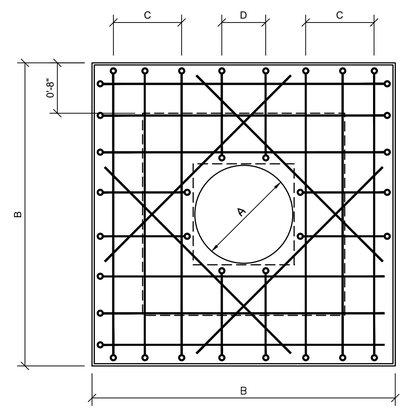

PLAN

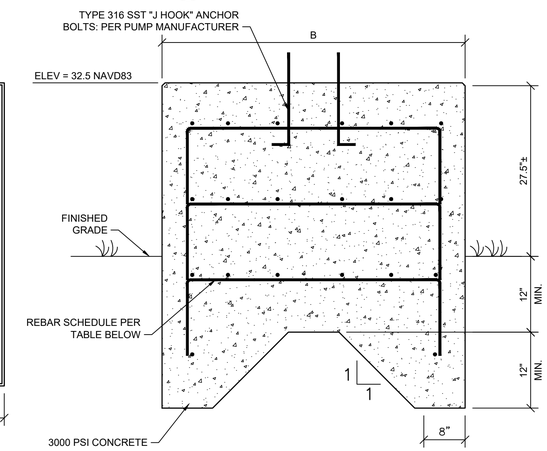

SECTION

CONCRETE WELL PAD REINFORCEMENT DIMENSIONS			
PIPE DIAMETER	PAD LENGTH (SQUARE)	REINFORCING NOTES	
A	B	C	D
UP TO 10"	4'–0"	3 #4 CONT. BARS E.W.	2 #4 E.S. AT WELLHEAD E.W.

NOTES:

1. REINFORCING NOT SHOWN IN OPPOSITE FOR CLARITY, BUT REINFORCEMENT SHALL BE PROVIDED IN BOTH DIRECTIONS.
2. HOOKS SHALL BE 1' LONG WHERE SHOWN.
3. CONCRETE WORK SHALL COMPLY WITH THE PROVISIONS OF ACI 318, ACI PRC–315, ACI SPEC 301 AND THE FLORIDA BUILDING CODE AND IN ACCORDANCE WITH THE REQUIREMENTS OF THE PROJECT SPECIFICATIONS.
4. ALL MATERIAL FOR CONCRETE WORK SHOWN ON THE DRAWINGS SHALL BE PROCURED AS CLASS P–4.
5. REINFORCEMENT SHALL BE ASTM A615 GR 60.
6. AT THE TIME CONCRETE IS PLACED, REINFORCEMENT SHALL BE FREE FROM MUD, OIL, OR OTHER COATINGS THAT DECREASE BOND.
7. BROOM FINISH ALL CONCRETE FINISHED.
8. ALL EXPOSED EDGES OF CONCRETE SHALL HAVE A 1/2" 45 DEGREE CHAMFER, UNLESS NOTED OTHERWISE.
9. 3" OF CONCRETE COVER IS REQUIRED FOR REINFORCEMENT AGAINST SOIL, OTHERWISE 2" OF CONCRETE COVER IS REQUIRED FOR REINFORCEMENT.
10. REMOVE AND REPLACE 12" OF SUBGRADE WITH COMPACTED STRUCTURAL FILL. COMPACT BACKFILL TO 95% OPTIMUM DENSITY.

6 CONCRETE WELL PAD REINFORCEMENT DETAILS

SCALE: NTS

BID PLANS

NO.	DATE	REVISION	BY	APVD

SEAL

DR ---- CHK ---- APVD ----

ENGR ----

Stantec
STANTEC (CERTIFICATE OF AUTHORIZATION #27013)
800 PARKWAY DRIVE SUITE 195
DEERFIELD BEACH, FLORIDA 33441-1828
TEL: (954) 487-1300
www.stantec.com

The Contractor shall verify and be responsible for all dimensions. DO NOT scale this drawing - any errors or omissions shall be reported to Stantec without delay.
The Copyrights to all designs and drawings are the property of Stantec. Reproduction or use for any purpose other than that authorized by Stantec is forbidden.

TRIBAL COMMUNITY DEVELOPMENT

PUBLIC WORKS DEPARTMENT
SEMINOLE TRIBE OF FLORIDA
5700 GRIFFIN RD.
DAVIE, FL 33024
PH (954) 966-6300

REUSE OF DOCUMENTS:

IMMOKALEE SEMINOLE INDIAN RESERVATION
RAW WATER WELL #4 WELLHEAD

WELLHEAD MECHANICAL DETAILS

811 Know what's **below.** **Call** before you dig.

DATE	2023.08
PROJ	17731189
DWG	1189-m-500
SHEET	M-501

ATTACHMENT A

SINGLE LINE DIAGRAM, SCHEMATIC DIAGRAM SYMBOLOGY AND PLAN SYMBOLOGY

THERMAL MAGNETIC CIRCUIT BREAKER
LOC X = LOCATION
100 — FRAME (AMPS)
20 — TRIP (AMPS)

MCP CIRCUIT BREAKER
LOC X = LOCATION
7 — CONTINUOUS AMPS
MCP — TRIP SETTING BASED ON MOTOR HORSEPOWER

LOW VOLTAGE DRAWOUT CIRCUIT BREAKER
100 / 20
(L-S-I-G)
L LONG TIME
S SHORT TIME
I INSTANTANEOUS
G GROUND FAULT

COMBINATION NEMA RATED STARTER WITH MCP DISCONNECT AND CONTROL POWER TRANSFORMER
X
40 / MCP
ROMAN NUMERAL = NEMA SIZE
X = LOCATION
* = STARTER TYPE
(BLANK) FULL VOLTAGE NON-REVERSING
FVR FULL VOLTAGE REVERSING
2S2W TWO SPEED TWO WINDING
2S1W TWO SPEED ONE WINDING

X VFD — VARIABLE FREQUENCY DRIVE
X = AMPERE RATING

X RVSS — REDUCED VOLTAGE SOLID STATE STARTER
X = AMPERE RATING

X Y — PACKAGED EQUIPMENT
X = EQUIPMENT SIZE
Y = TYPE (KW, KVA, OR HP AS INDICATED)

G — GENERATOR
RATINGS AS INDICATED

TRANSFER SWITCH (MANUAL OR AUTOMATIC)
RATINGS AS INDICATED

X — METERING DEVICE
X = METER TYPE
WHM WATT HOUR METER
WM WATT METER
AM AMMETER
VM VOLTMETER
PFM POWER FACTOR METER

480/120 (3) — POTENTIAL TRANSFORMER
RATIO AND NUMBER OF PT'S AS INDICATED

100/5 (3) — CURRENT TRANSFORMER
RATIO AND NUMBER OF CT'S AS INDICATED

GROUND FAULT CURRENT TRANSFORMER
RATIO AS INDICATED

5A — FUSE
SIZE AS INDICATED

X — MOTOR
X = HORSEPOWER
* = FULL LOAD AMPS

DELTA-WYE TRANSFORMER WITH SECONDARY KVA SIZE AND VOLTAGE RATIO AS INDICATED

MOV — ELECTRICAL MOTOR OPERATED VALVE, WITH INTEGRAL REVERSING STARTER

30A — DISCONNECT SWITCH
SIZE AS INDICATED

30A / 30A — FUSED DISCONNECT SWITCH
SIZE AS INDICATED

SPD — SURGE PROTECTIVE DEVICE

SSM — SOLID STATE METERING DEVICE

SSMP — SOLID STATE MOTOR PROTECTIVE DEVICE

L O R — THREE - POSITION SELECTOR SWITCH

VACUUM OR PRESSURE SWITCH
CLOSE ON RISING PRESSURE

VACUUM OR PRESSURE SWITCH
OPEN ON RISING PRESSURE

FLOAT LEVEL SWITCH
CLOSE ON RISING LEVEL

FLOAT LEVEL SWITCH
OPEN ON RISING LEVEL

NORMALLY OPEN

NORMALLY CLOSED

NORMALLY OPEN HELD CLOSED

NORMALLY CLOSED HELD OPEN

TEMPERATURE SWITCH
CLOSE ON RISING TEMPERATURE

TEMPERATURE SWITCH
OPEN ON RISING TEMPERATURE

FLOW SWITCH
CLOSE ON INCREASING FLOW

FLOW SWITCH
OPEN ON INCREASING FLOW

E-STOP PUSHBUTTON

X — CONTROL RELAY OR COIL
X = DEVICE
CR CONTROL RELAY
TD TIME DELAY RELAY
(TIMING RANGE AS INDICATED)
M MOTOR STARTER
PC PHOTOCELL

NORMALLY OPEN CONTACT

NORMALLY CLOSED CONTACT

TIMED CONTACTS
CONTACT ACTION IS DELAYED AFTER COIL IS:

ENERGIZED

TD1 — NORMALLY OPEN WITH TIME DELAY CLOSING

TD1 — NORMALLY CLOSED WITH TIME DELAY OPENING

DE-ENERGIZED

TD1 — NORMALLY OPEN WITH INSTANT CLOSING AND TIME DELAY OPENING

TD1 — NORMALLY CLOSED WITH INSTANT OPENING AND TIME DELAY CLOSING

START — NORMALLY OPEN PUSHBUTTON

STOP — NORMALLY CLOSED PUSHBUTTON

OFF ON — NO/NC MAINTAINED PUSHBUTTON

X — PILOT LIGHT
X = LENS COLOR
R RED
G GREEN
A AMBER
W WHITE

X — PILOT LIGHT (PUSH-TO-TEST)
X = LENS COLOR (SEE ABOVE)

HORN

ETM — ELAPSED TIME METER

HEATER

GROUND CONNECTION

CROSSING OF CONDUCTORS - NOT CONNECTED

CROSSING OF CONDUCTORS - CONNECTED

FUSE

VOLTAGE SURGE SUPPRESSOR

RECEPTACLES

X-# — 120V DUPLEX RECEPTACLE, NEMA CONFIGURATION 5-20R (WALL MOUNT)
X = PANELBOARD DESIGNATION
# = CIRCUIT DESIGNATION
* = TYPE
WP WEATHERPROOF
XP EXPLOSION PROOF
GFCI GROUND FAULT CIRCUIT INTERRUPTER

CONDUIT AND RACEWAY SYMBOLOGY

EXPOSED OR CONCEALED CONDUIT

CONDUIT RUN (UNDERGROUND OR IN CONCRETE)

CONDUIT RUN (CHANGE IN ELEVATION)

CONDUIT TURNING UP

CONDUIT TURNING DOWN

CONDUITS GROUPED TOGETHER BUT SHOWN AS A SINGLE LINE FOR CLARITY

CONDUIT FROM FLOOR ABOVE TO FLOOR BELOW

CONDUIT CAPPED, OR SEALED

HOMERUN TO EQUIPMENT INDICATED (3/4 " CONDUIT, 2 #12, 1 #12 GND UNLESS INDICATED OTHERWISE)

J — JUNCTION BOX OR FITTING

MISCELLANEOUS ELECTRICAL SYMBOLOGY

POWER PANEL

DISCONNECT SWITCH

M — MOTOR

T — THERMOSTAT

HORN

COMBINATION STARTER

LIGHTING SYMBOLOGY

X-#a — PENDANT OR CEILING MOUNT LUMINAIRE
X = LIGHTING PANEL DESIGNATION
# = CIRCUIT NUMBER
a = SWITCH DESIGNATION

PENDANT OR CEILING MOUNT LUMINAIRE - UNSWITCHED (NIGHT LIGHT)

WALL MOUNTED LUMINAIRE

POLE, BRACKET, ARM, AND STREETLIGHT

FLUORESCENT LUMINAIRE

FLUORESCENT LUMINAIRE - UNSWITCHED

EMERGENCY LUMINAIRE
BATTERY OPERATED

EXIT LIGHT, SHOWN WITH TWO ILLUMINATED SIDES, ARROWS INDICATE DIRECTION OF EXIT

A * — LUMINAIRE CALLOUT
A = LUMINAIRE TYPE
* = APPROXIMATE MOUNTING HEIGHT AFF
CLG = CEILING MOUNT
(SEE LUMINAIRE SCHEDULE FOR MORE DETAILS)

$ X-#a * — LIGHT SWITCH
X = LIGHTING PANEL DESIGNATION
# = CIRCUIT DESIGNATION
a = SWITCH DESIGNATION
* = SWITCH TYPE
3 3-WAY
4 4-WAY
D DIMMER
M MANUAL MOTOR STARTER

LIGHTING PANEL

GROUNDING SYMBOLOGY

GROUND ROD AND GROUND WELL

GROUND ROD (3/4" X 10'-0")

GROUND CONNECTION - BOLTED TYPE

GROUND CONNECTION - EXOTHERMIC TYPE

BARE COPPER GROUND TO GROUND WIRE IN SLAB, OR UNDERGROUND GROUND GRID, SIZE AS NOTED

EARTH GROUNDING

ABBREVIATIONS

A	AMPERE, AUTOMATIC
AC	ALTERNATING CURRENT
AF	CIRCUIT BREAKER FRAME SIZE
AT	CIRCUIT BREAKER AMPERE TRIP SETTING
ATS	AUTOMATIC TRANSFER SWITCH
AWG	AMERICAN WIRE GAUGE
BKR	BREAKER
C	CONDUIT, CLOSED
CAP	CAPACITOR
CB	CIRCUIT BREAKER
CKT	CIRCUIT
CP	CONTROL PANEL
CPT	CONTROL POWER TRANSFORMER
CT	CURRENT TRANSFORMER
DISC	DISCONNECT
E	EMERGENCY
EMT	ELECTRICAL METALLIC TUBING
EO	ELECTRICALLY OPERATED CLOSING SPRING CHARGER
ETM	ELAPSED TIME METER
F	FREQUENCY, FUSE, FIXED
FLA	FULL LOAD AMPS
FO	FIBER OPTIC
FVR	FULL VOLTAGE REVERSING
FVNR	FULL VOLTAGE NON-REVERSING
GFCI	GROUND FAULT CIRCUIT INTERRUPTER
GND	GROUND
H	HAND
HH	HAND HOLE
HOA	HAND-OFF-AUTOMATIC
HS	HAND SWITCH
HZ	HERTZ
IMC	INTERMEDIATE METALLIC CONDUIT
I/O	INPUT/OUTPUT
Isc	SHORT CIRCUIT CURRENT, AMPS
J, JB	JUNCTION BOX
KA	KILO AMPERES
KAIC	KILO AMP INTERRUPTING CURRENT
KCM	KILO CIRCULAR MILS
KVA	KILOVOLT AMPERE
L	LOCAL
LCP	LOCAL CONTROL PANEL
LCS	LOCAL CONTROL STATION
LOC	LOCAL
LOR	LOCAL-OFF-REMOTE
LRA	LOCKED ROTOR AMPS
LS	LEVEL SWITCH; LONG TIME, SHORT TIME
LSI	LONG TIME, SHORT TIME, INSTANTANEOUS
LSIG	LONG TIME, SHORT TIME, INSTANTANEOUS, GROUND FAULT
LTS, LTG	LIGHTS/LIGHTING
MA	MILLIAMPERE
MCP	MOTOR CIRCUIT PROTECTOR
MLO	MAIN LUGS ONLY
MH	MANHOLE
MO	MANUALLY OPERATED CLOSING SPRING CHARGER
MOV	MOTOR OPERATED VALVE
MTS	MANUAL TRANSFER SWITCH
NC	NORMALLY CLOSED
NEU	NEUTRAL
NO	NORMALLY OPEN
O	OPEN, OFF
OL, O/L	OVERLOAD
PB	PUSHBUTTON, PULLBOX
PC	PHOTOCELL
PF	POWER FACTOR
PH	PHASE
PP	POWER PANELBOARD
POT	POTENTIOMETER
PRI	PRIMARY
PT	POTENTIAL TRANSFORMER
PWR	POWER
R	REMOTE
RECPT	RECEPTACLE
RGS	RIGID GALVANIZED STEEL
RMS	ROOT MEAN SQUARE
RTU	REMOTE TERMINAL UNIT
RVSS	REDUCED VOLTAGE SOLID STATE STARTER
SPDT	SINGLE POLE DOUBLE THROW
SPST	SINGLE POLE SINGLE THROW
SSM	SOLID STATE METER
STP	SHIELDED TWISTED PAIR
SWBD	SWITCHBOARD
SWGR	SWITCHGEAR
TD	TIME DELAY RELAY
TS	TEMPERATURE SWITCH
U/G	UNDERGROUND
UPS	UNINTERRUPTIBLE POWER SUPPLY
UTP	UNSHIELDED TWISTED PAIR

ABBREVIATIONS CONTINUED

V	VOLTAGE, VOLTS
VA	VOLT AMPERE
VAR	VOLT AMPERE REACTIVE
VFD	VARIABLE FREQUENCY DRIVE
W	WATTS, WIRE
WP	WEATHERPROOF
XFMR	TRANSFORMER
XMTR	TRANSMITTER
XP	EXPLOSION PROOF

GENERAL ELECTRICAL NOTES

1. ALL RACEWAYS AND EQUIPMENT SHALL BE INSTALLED AND GROUNDED IN ACCORDANCE WITH THE 2017 EDITION OF THE NATIONAL ELECTRICAL CODE AND APPLICABLE LOCAL CODES.
2. THE CONTRACTOR SHALL VERIFY THE EXACT LOCATION OF TERMINAL BOXES AND CONDUIT ENTRANCES OF ALL EQUIPMENT AGAINST APPROVED SHOP DRAWINGS BEFORE STUBBING UP CONDUITS.
3. REFER TO SPECIFICATION SECTION 260533 FOR REQUIREMENTS RELATED TO FLEXIBLE CONDUIT INSTALLATION.
4. CONDUIT RUNS ARE SHOWN DIAGRAMMATICALLY ONLY AND SHALL BE INSTALLED IN A MANNER TO PREVENT CONFLICTS WITH EQUIPMENT OR STRUCTURAL CONDITIONS. EXPOSED CONDUIT SHALL BE INSTALLED PARALLEL OR PERPENDICULAR TO BEAMS AND WALLS. REFER TO SPECIFICATION SECTION 260533.
5. CONDUIT STUB-UPS SHALL NOT BE MORE THAN 6 INCHES FROM THE CENTERLINE OF TERMINAL BOXES.
6. IN THE EVENT OF INTERFERENCE BETWEEN ELECTRICAL EQUIPMENT SHOWN ON THE DRAWINGS AND OTHER EQUIPMENT, THE CONTRACTOR SHALL NOTIFY THE ENGINEER IN WRITING AND THE ENGINEER SHALL APPROVE PROPOSED CHANGES BEFORE THEY ARE MADE.
7. ALL SURFACE MOUNTED PANELS AND PANELBOARDS ON THE INTERIOR OF EXTERIOR WALLS ABOVE GRADE OR IN OTHER LOCATIONS CONSIDERED DAMP OR WET SHALL BE MOUNTED SO AS TO MAINTAIN A 1/4 INCH (MINIMUM) AIR SPACE BETWEEN THE ENCLOSURE AND THE WALL.
8. LOCATION OF PULLBOXES ARE APPROXIMATE. THE CONTRACTOR SHALL COORDINATE EXACT LOCATION WITH BUILDING MECHANICAL PIPING AND SHALL BE 6 INCHES (MINIMUM) AWAY FROM BUILDING MECHANICAL PIPING FLOW LINES.
9. ONLY MAJOR PULLBOXES ARE SHOWN. THE CONTRACTOR SHALL PROVIDE ADDITIONAL PULLBOXES WHERE REQUIRED TO MAKE A WORKABLE INSTALLATION.
10. THE WORK SHALL BE PERFORMED IN ACCORDANCE WITH THE DETAILS WHETHER OR NOT THEY ARE REFERENCED ON THE DRAWINGS.
11. ALL CONDUIT RUNS CROSSING EXPANSION JOINTS SHALL HAVE EXPANSION OR EXPANSION AND DEFLECTION TYPE FITTINGS. FOR LOCATIONS OF EXPANSION JOINTS, REFER TO THE STRUCTURAL DWGS.
12. LUMINAIRES SHALL BE MOUNTED ACCORDING TO THE MOUNTING HEIGHT GIVEN ON THE DRAWINGS, WITH THE DISTANCE BEING MEASURED FROM THE BOTTOM OF THE LUMINAIRE TO THE FINISHED FLOOR. THE APPROPRIATE MOUNTING BRACKETS AND HARDWARE SHALL BE SUPPLIED.
13. ALL PANELBOARDS SHALL BE MOUNTED SO THAT THE DISTANCE FROM THE CENTERLINE OF THE TOP CIRCUIT BREAKER OPERATING HANDLE IN THE UPPERMOST POSITION TO THE FINISHED FLOOR SHALL NOT EXCEED 6'-7".
14. THE WIRING DIAGRAMS, QUANTITY AND SIZE OF WIRES AND CONDUIT REPRESENT A SUGGESTED ARRANGEMENT BASED UPON SELECTED STANDARD COMPONENTS OF ELECTRICAL EQUIPMENT. MODIFICATIONS ACCEPTABLE TO THE ENGINEER MAY BE MADE BY THE CONTRACTOR TO ACCOMMODATE EQUIPMENT ACTUALLY PURCHASED. THE BASIC SEQUENCE AND METHOD OF CONTROL MUST BE MAINTAINED AS INDICATED ON THE DRAWINGS AND/OR SPECIFICATIONS.
15. CONNECTIONS BETWEEN RIGID CONDUIT AND MOTOR TERMINAL BOXES OR SIMILAR EQUIPMENT SUBJECT TO VIBRATION SHALL BE FLEXIBLE LIQUID-TIGHT CONDUIT.
16. CONDUITS SHALL BE TERMINATED SO AS TO PERMIT NEAT CONNECTION TO MOTORS AND OTHER EQUIPMENT.
17. CONDUITS FOR FUTURE EQUIPMENT OR EXTENSIONS SHALL BE TERMINATED AS SHOWN IN DETAIL OR AS SPECIFIED.
18. MCC AND SWITCHGEAR COMPARTMENT DESIGNATIONS SHALL BE AS FOLLOWS:
    - 18.1. BLANK/SPACE: CONTAINS NECESSARY BUS AND HARDWARE FOR FUTURE ADDITION OF BREAKERS OR STARTERS.
    - 18.2. SPARE: CONTAINS A COMPLETE INSTALLED BREAKER OR STARTER AVAILABLE FOR FUTURE USE.
19. ALL MOTOR STARTER CONTROL POWER TRANSFORMERS SHALL BE SIZED TO PROVIDE SUFFICIENT VOLT-AMPERE CAPACITY FOR OPERATING ALL LOCAL AND REMOTE ELECTRICAL DEVICES ASSOCIATED WITH CONTROL OF THE MOTOR IN ADDITION TO THE STARTER COIL.
20. MOTOR CONTROL CENTERS AND ALL FREE STANDING PANELS SHALL BE SET ON CONCRETE HOUSEKEEPING PADS WITH LEVELING CHANNELS EMBEDDED IN THE PAD.
21. ALL RECEPTACLES IN OUTDOOR AND ANTICIPATED WET AREAS SHALL BE GROUND FAULT CIRCUIT INTERRUPTER RECEPTACLES WITH WEATHERPROOF COVERS.
22. ELECTRICAL CONTRACTOR SHALL VISIT THE SITE PRIOR TO BIDDING THE PROJECT TO VERIFY THE SCOPE OF WORK WITH FIELD CONDITIONS. PARTICULAR ATTENTION SHOULD BE GIVEN TO NEW CONDUIT RUNS IN EXISTING BUILDINGS.
23. EQUIPMENT LOCKOUTS SHALL BE IN STRICT ACCORDANCE WITH OWNER'S REQUIREMENTS.
24. FOR LIGHTING AND RECEPTACLE SYSTEMS, ONLY CIRCUIT NUMBERS ARE SHOWN. CONTRACTOR SHALL PROVIDE ALL NECESSARY CONDUITS, WIRES, FITTINGS, JUNCTION BOXES AND ALL NECESSARY COMPONENTS SHOWN OR NOT SHOWN ON THE DRAWINGS, TO MAKE THE ELECTRICAL INSTALLATION COMPLETE AND OPERATIONAL. ALL CONDUIT RUNS SHALL BE CONCEALED UNLESS INDICATED OTHERWISE. CIRCUIT LOADING SHALL BE AS INDICATED IN THE PANEL SCHEDULES. ALL LIGHTING AND RECEPTACLE CIRCUITS SHALL INCLUDE GROUND WIRE.

BID PLANS

NO.	DATE	REVISION	BY	SEAL

ENGR	BB	DR	FL
CHK	JL	APVD	JL

Stantec
STANTEC (CERIFICAE OF AUTHORIZATION #27013)
800 PARKWAY DRIVE SUITE 195
DEERFIELD BEACH, FLORIDA 33441-1828
Tel: 954-545-1200
www.stantec.com

The Contractor shall verify and be responsible for all dimensions. DO NOT scale this drawing - any errors or omissions shall be reported to Stantec without delay.
The Copyrights to all designs and drawings are the property of Stantec. Reproduction or use for any purpose other than that authorized by Stantec is forbidden.

TRIBAL COMMUNITY DEVELOPMENT
PUBLIC WORKS DEPARTMENT
SEMINOLE TRIBE OF FLORIDA
5700 GRIFFIN RD.
DAVIE, FL 33024
PH (954) 966-6300

IMMOKALEE SEMINOLE INDIAN RESERVATION
RAW WATER WELL #4 WELLHEAD

SYMBOLS, LEGEND AND NOTES

REUSE OF DOCUMENTS:

811 Know what's below. Call before you dig.

DATE	2023.08
PROJ	17731189
DWG	11189-E-001.DWG
	E-001

ATTACHMENT A

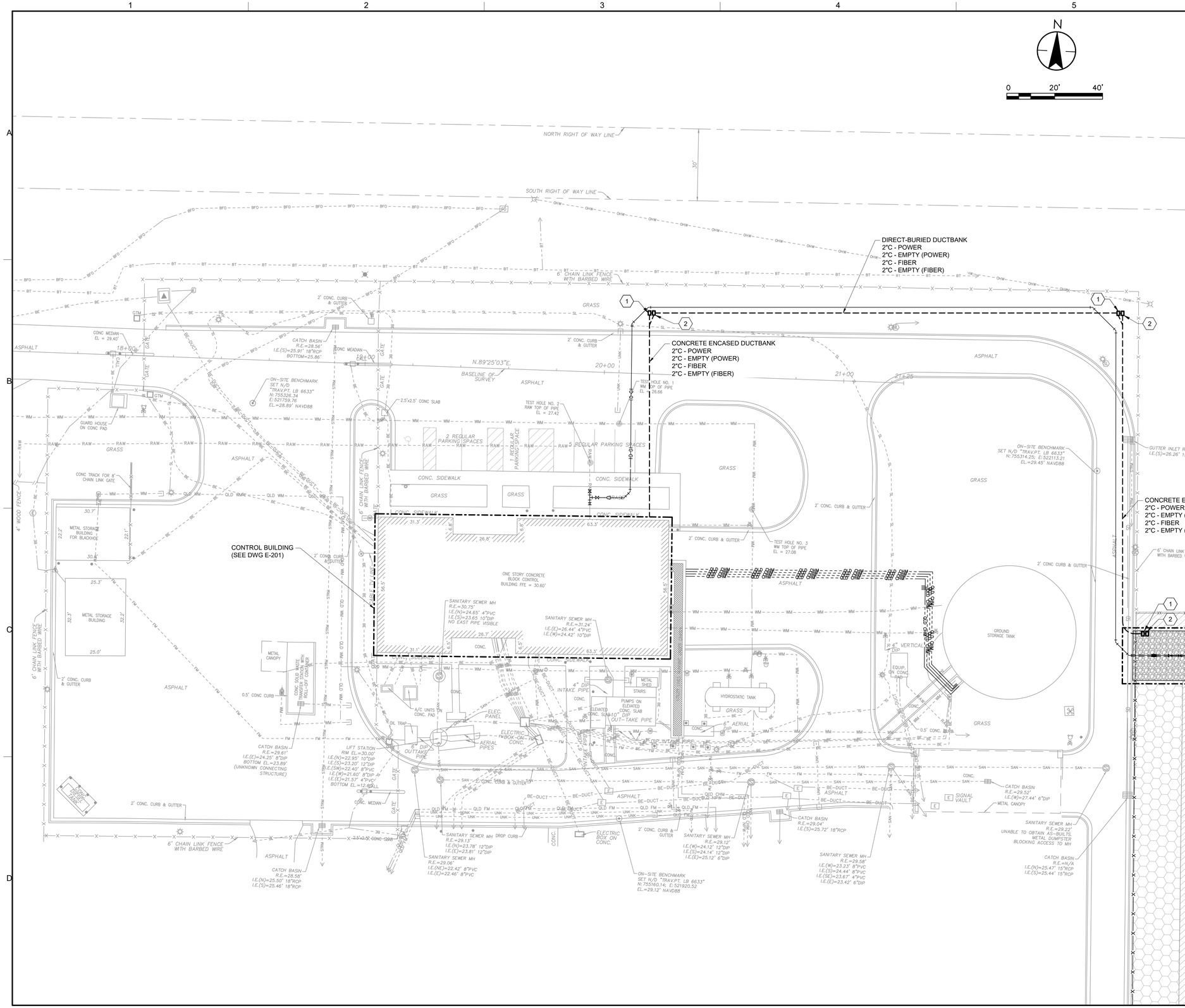

GENERAL NOTES

A. TAKE ALL NECESSARY MEASURES TO AVOID DAMAGE TO EXISTING UNDERGROUND UTILITIES. ANY DAMAGES SHALL BE REPAIRED AT A THE CONTRACTOR'S OWN COST.

B. TO THE GREATEST EXTENT PRACTICABLE, MAINTAIN A MINIMUM 12" HORIZONTAL CLEARANCE BETWEEN DUCTBANK AND WELL NO. 4 PIPING.

KEYNOTES

1. PULL BOX FOR POWER CONDUCTORS. TEXT ON COVER SHALL READ "ELECTRIC, WELL #4".
2. PULL BOX FOR FIBER OPTIC CABLE. TEXT ON COVER SHALL READ "FIBER, WELL #4".

NO.	DATE	REVISION	BY	SEAL

ENGR	DR	CHK	APVD
BB	FL	JL	JL

Stantec
STANTEC (CERTIFICATE OF AUTHORIZATION #27013)
800 PARKWAY DRIVE SUITE 195
DEERFIELD BEACH, FLORIDA 33441-1828
TEL: (954) 481-7400
www.stantec.com

The Contractor shall verify and be responsible for all dimensions. DO NOT scale the drawing - any errors or omissions shall be reported to Stantec without delay.
The Copyrights to all designs and drawings are the property of Stantec. Reproduction or use for any purpose other than that authorized by Stantec is forbidden.

TRIBAL COMMUNITY DEVELOPMENT

PUBLIC WORKS DEPARTMENT
SEMINOLE TRIBE OF FLORIDA
5700 GRIFFIN RD.
DAVIE, FL 33024
PH (954) 966-6300

IMMOKALEE SEMINOLE INDIAN RESERVATION
RAW WATER WELL #4 WELLHEAD

OVERALL SITE PLAN - ELECTRICAL

REUSE OF DOCUMENTS:

811 Know what's **below.** **Call** before you dig.

DATE	2023.08
PROJ	17731189
DWG	11189-E-101.DWG
	E-101

BID PLANS

ATTACHMENT A

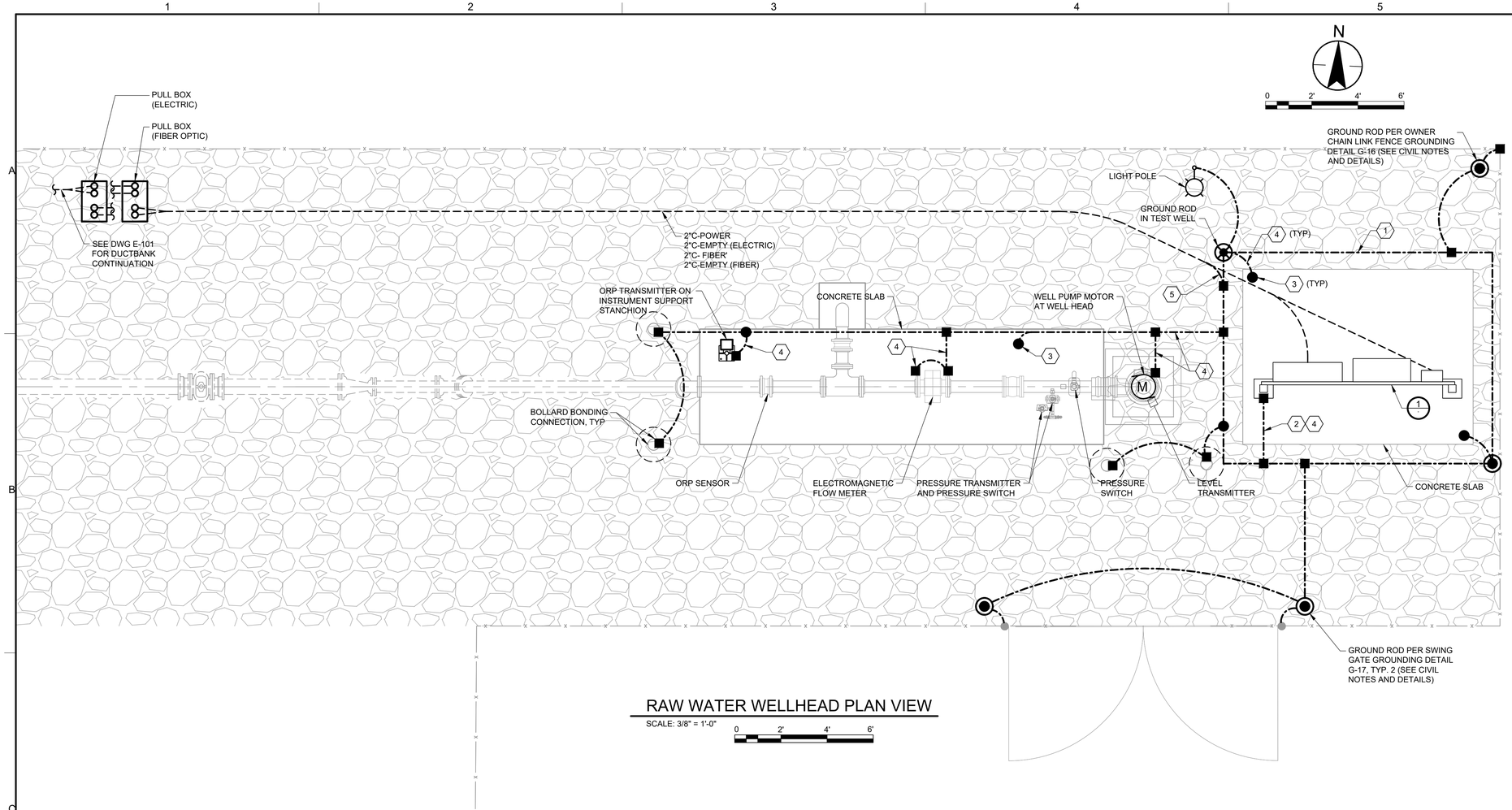

RAW WATER WELLHEAD PLAN VIEW

SCALE: 3/8" = 1'-0"

GENERAL NOTES

A. PROVIDE 1" PVC SLEEVE AT ALL TRANSITIONS INTO CONCRETE SLAB. FILL WITH FLEXIBLE WEATHERPROOF SEALANT

B. FLOW METER DISPLAY SHALL FACE TO THE NORTH. PROVIDE SUNSHIELD.

C. REFER TO SINGLE LINE DIAGRAM ON DWG E-601 FOR WIRING REQUIREMENTS.

D. REFER TO CIVIL NOTES AND DETAILS FOR INSTALLATION DETAILS FOR FLOW METER, PRESSURE TRANSMITTER, PRESSURE SWITCH, AND ORP SENSOR.

KEYNOTES

1. GROUNDING RING. USE # 4/0 AWG BARE, STRANDED, TINNED COPPER WIRE. BURY 30" BELOW GRADE, MINIMUM.
2. BOLTED GROUND CONNECTION TO EQUIPMENT RACK.
3. EXOTHERMIC CONNECTION TO LOWER REBAR IN CONCRETE SLAB.
4. BONDING CONDUCTOR. USE #6 AWG BARE SOLID COPPER WIRE. BELOW-GRADE RUNS SHALL BE BURIED 30" DEEP, MINIMUM.
5. TERMINATE GROUND CONDUCTOR IN DUCTBANK AT GROUNDING LOOP, AS SHOWN.

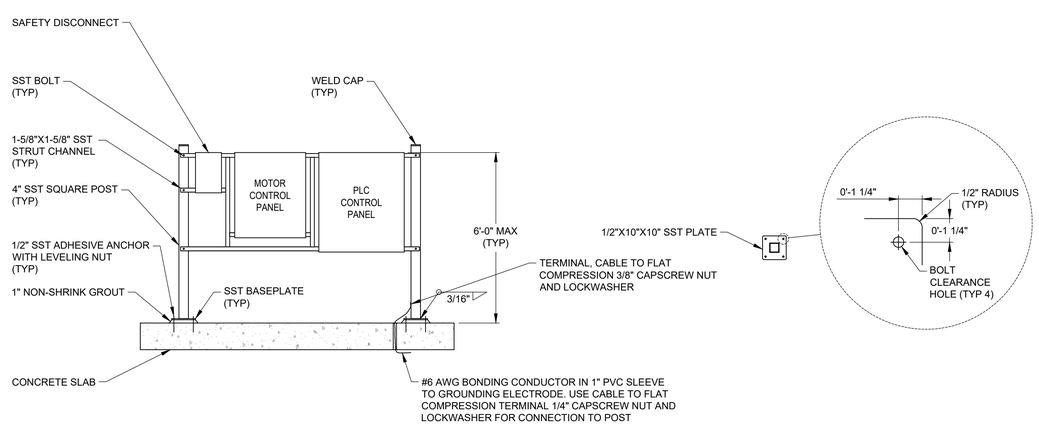

1 - EQUIPMENT RACK DETAIL

SCALE: NO SCALE

BASEPLATE PLAN VIEW

BID PLANS

SEAL

NO.	DATE	REVISION	BY

ENGR	DR	CHK	APVD
BB	FL	JL	JL

Stantec
STANTEC (CERTIFICATE OF AUTHORIZATION #27013)
800 PARKWAY DRIVE SUITE 195
DEERFIELD BEACH, FLORIDA 33441-1828
(954) 487-1201
www.stantec.com

The Contractor shall verify and be responsible for all dimensions. DO NOT scale the drawing - any errors or omissions shall be reported to Stantec without delay.
The Copyrights to all designs and drawings are the property of Stantec. Reproduction or use for any purpose other than that authorized by Stantec is forbidden.

TRIBAL COMMUNITY DEVELOPMENT

PUBLIC WORKS DEPARTMENT
SEMINOLE TRIBE OF FLORIDA
5700 GRIFFIN RD.
DAVIE, FL 33024
PH (954) 966-6300

REUSE OF DOCUMENTS:

IMMOKALEE SEMINOLE INDIAN RESERVATION
RAW WATER WELL #4 WELLHEAD

WELL SITE PLAN - ELECTRICAL

811 Know what's below. Call before you dig.

DATE	2023.08
PROJ	17731189
DWG	11189-E-102.DWG
	E-102

DWG PATH: \\Us0231-ppfss01\workgroup\1773\active\17731189 Immokalee Well #4 Phase 2_Design\drawings\electrical\11189-E-102.dwg

PLOT DATE: Aug16, 2023 5:46pm

ATTACHMENT A

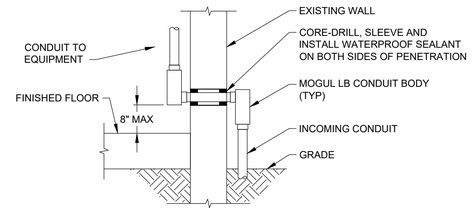

1 / - CONDUIT WALL PENETRATION
SCALE: NO SCALE

N

0 4' 8' 12'

GENERAL NOTES

A. FIELD COORDINATE OVERHEAD ROUTING TO ACCOUNT FOR EXISTING FIELD CONDITIONS AND OBSTRUCTIONS.

B. CORE DRILL ALL PENETRATIONS.

C. APPLY FIRESTOP SEALANT TO PENETRATIONS THROUGH FIRE RATED WALLS.

D. SAW CUT SIDEWALK AND PAVEMENT AS REQUIRED TO COMPLETE THE INSTALLATION. REPAIR TO MATCH SURROUNDINGS.

E. WHEREVER POSSIBLE, ROUTE CONDUITS CONCEALED IN CEILING.

F. TERMINATE GROUND CONDUCTOR IN DUCT BANK AT EXISTING BUILDING GROUNDING LOOP, AS SHOWN.

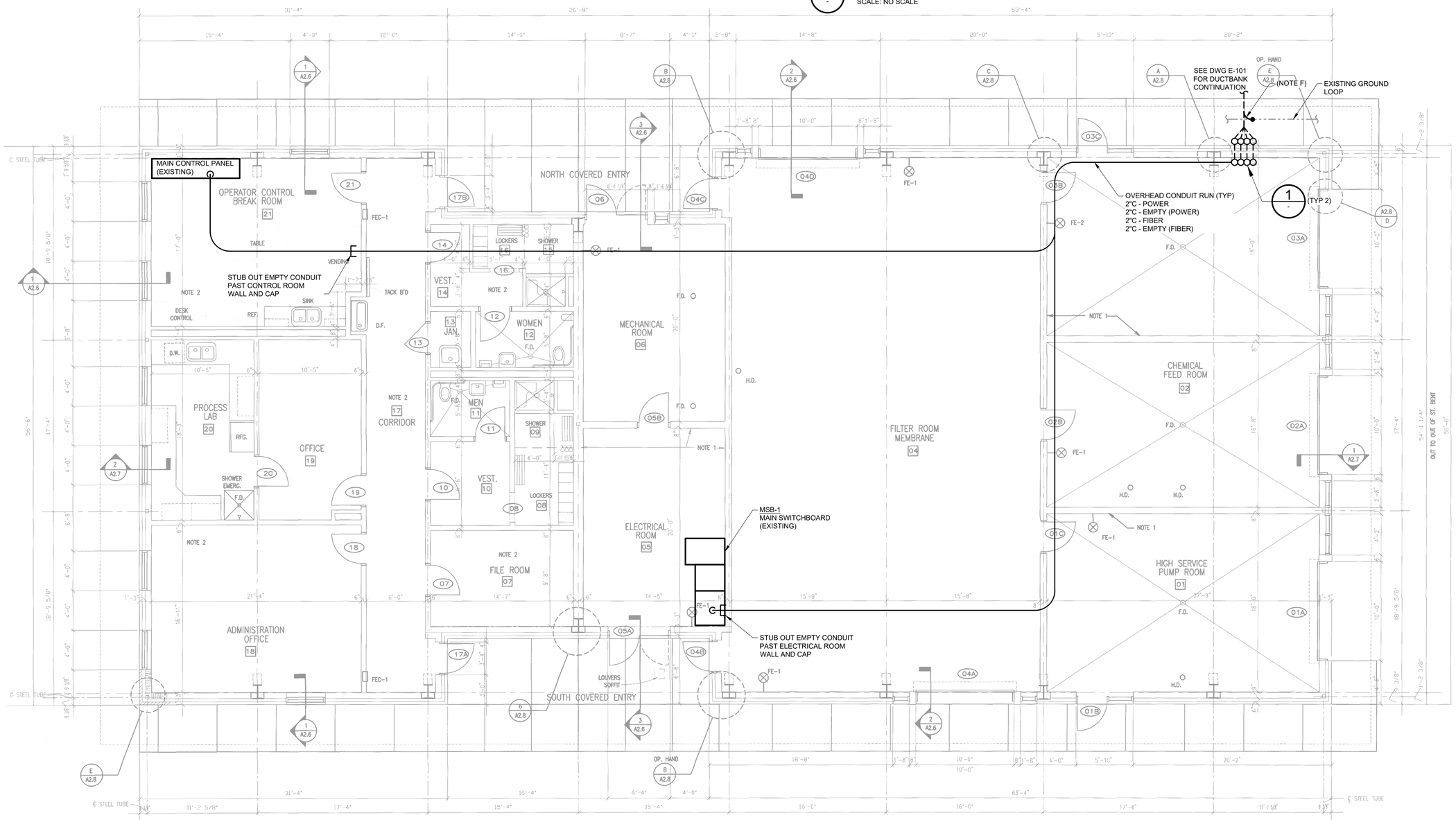

CONTROL BUILDING
SCALE: 3/16" = 1'-0"

BID PLANS

NO.	DATE	REVISION	BY	APVD

SEAL

ENGR	CHK	APVD
BB	JL	
DR		
FL		

Stantec
STANTEC (CERTIFICATE OF AUTHORIZATION #27013)
800 PARKWAY DRIVE SUITE 195
DEERFIELD BEACH, FLORIDA 33441-1828
Tel: 954-487-1300
www.stantec.com

The Contractor shall verify and be responsible for all dimensions. DO NOT scale the drawing - any errors or omissions shall be reported to Stantec without delay.
The Copyrights to all designs and drawings are the property of Stantec. Reproduction or use for any purpose other than that authorized by Stantec is forbidden.

TRIBAL COMMUNITY DEVELOPMENT
PUBLIC WORKS DEPARTMENT
SEMINOLE TRIBE OF FLORIDA
5700 GRIFFIN RD.
DAVIE, FL 33024
PH (954) 966-6300

REUSE OF DOCUMENTS:

IMMOKALEE SEMINOLE INDIAN RESERVATION
RAW WATER WELL #4 WELLHEAD

CONTROL BUILDING ELECTRICAL PLAN

811 Know what's below. Call before you dig.

DATE	2023.08
PROJ	17731189
DWG	11189-E-201.DWG
	E-201

DWG PATH: \\Us0231-ppfss01\workgroup\1773\active\17731189 Immokalee Well #4 Phase 2_Design\drawings\electrical\11189-E-201.dwg

PLOT DATE: Aug16, 2023 5:46pm

ATTACHMENT A

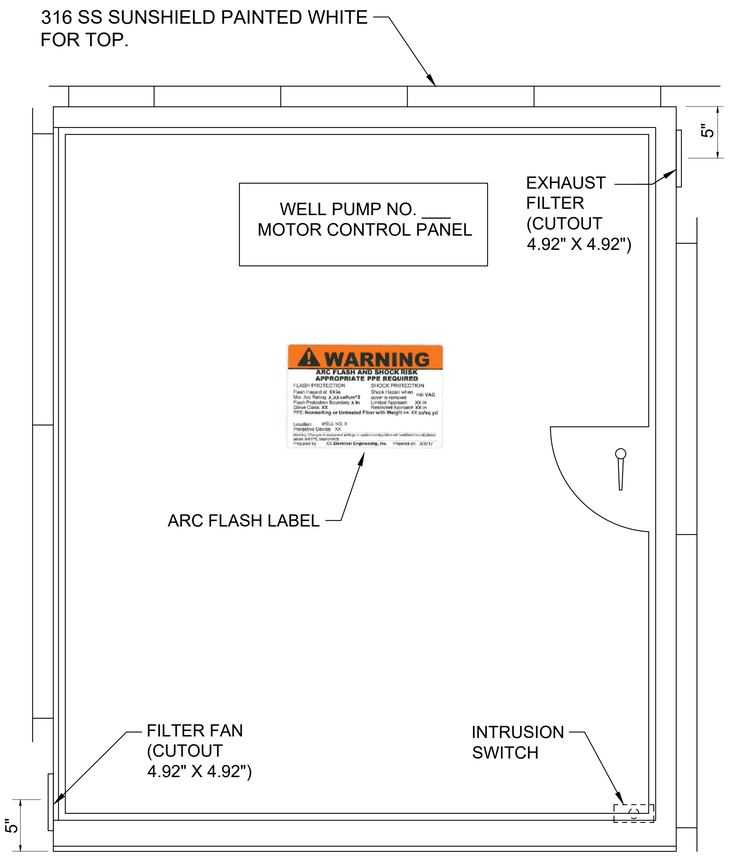

36"H X 30"W X 12"D, NEMA 3R, 316 STAINLESS STEEL PAINTED WHITE, 3-PT LATCH WITH LOCKABLE HASP, DRIP SHIELD KIT AND SUNSHIELD ON TOP, SIDES AND FRONT, ALL 316 STAINLESS STEEL PAINTED WHITE

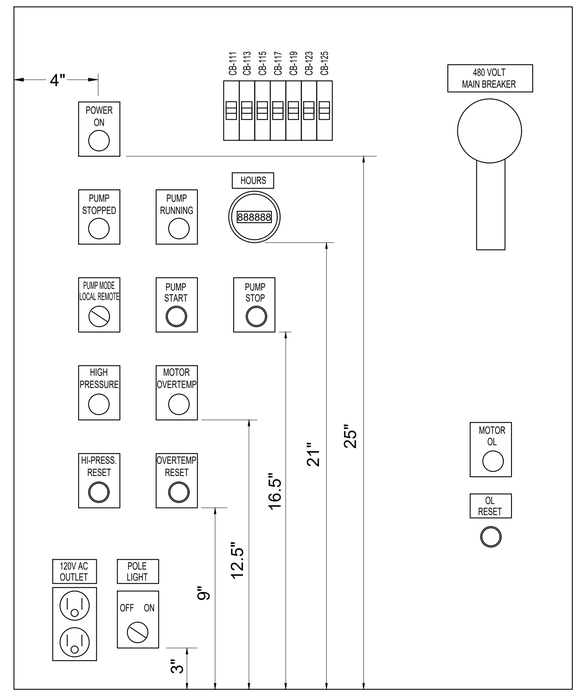

ALUMINIUM INNER DOOR

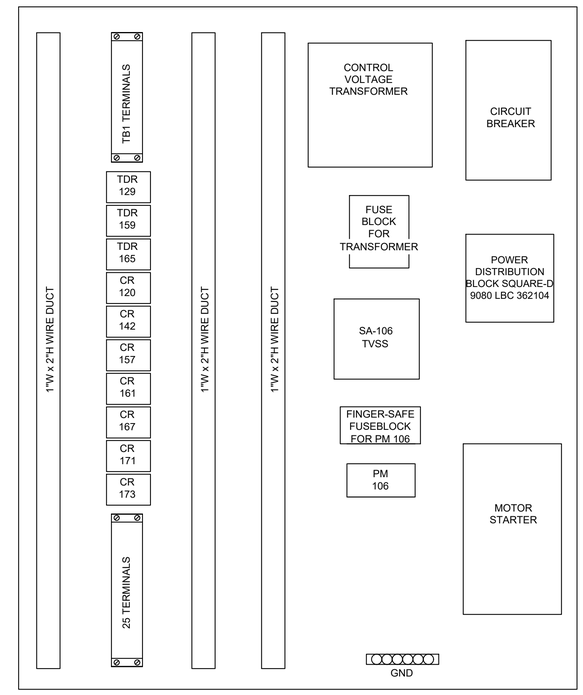

33"H X 27"W, ALUMINIUM BACKPAN

BID PLANS

NO.	DATE	REVISION	BY	SEAL

	DR	CHK	APVD
ENGR	FL	JL	JL
BB			

Stantec

STANTEC (CERTIFICATE OF AUTHORIZATION #27013)
800 PARKWAY DRIVE SUITE 195
DEERFIELD BEACH, FLORIDA 33441-1828
Tel. 954-487-1100
www.stantec.com

The Contractor shall verify and be responsible for all dimensions. DO NOT scale this drawing - any errors or omissions shall be reported to Stantec without delay.
The Copyrights to all designs and drawings are the property of Stantec. Reproduction or use for any purpose other than that authorized by Stantec is forbidden.

TRIBAL COMMUNITY DEVELOPMENT

PUBLIC WORKS DEPARTMENT
SEMINOLE TRIBE OF FLORIDA
5700 GRIFFIN RD.
DAVIE, FL 33024
PH (954) 966-6300

REUSE OF DOCUMENTS:

IMMOKALEE SEMINOLE INDIAN RESERVATION
RAW WATER WELL #4 WELLHEAD

PUMP CONTROL PANEL LAYOUT

811 Know what's below. Call before you dig.

DATE	2023.08
PROJ	17731189
DWG	11189-E-500.DWG
	E-501

DWG PATH: \\Us0231-ppfss01\workgroup\1773\active\17731189 Immokalee Well #4 Phase 2_Design\drawings\electrical\11189-E-500.dwg

PLOT DATE: Aug16, 2023 5:47pm

ATTACHMENT A

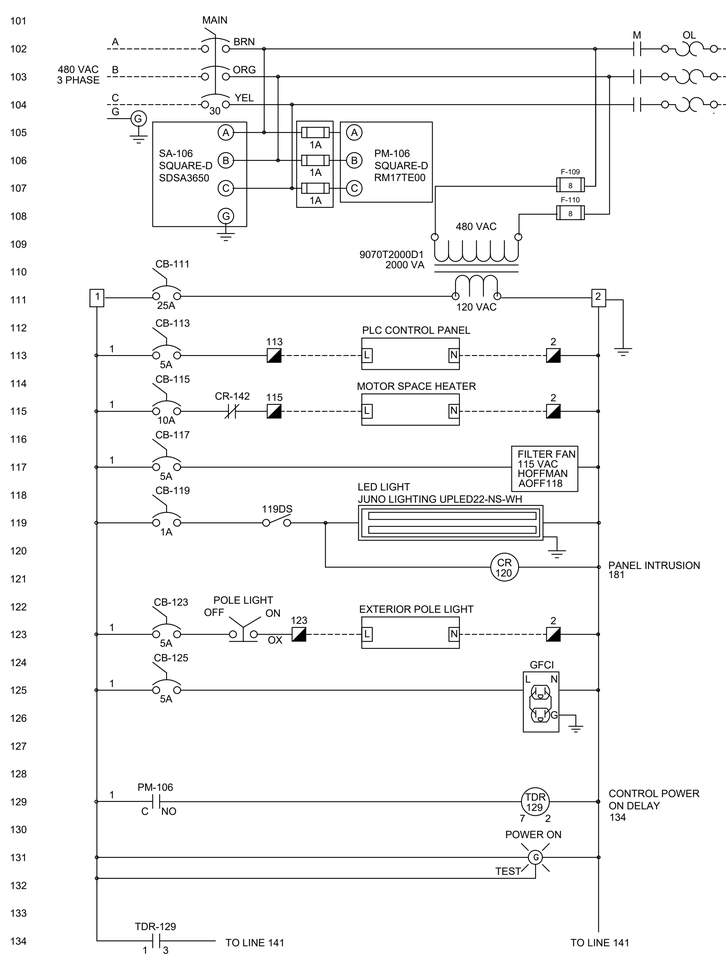

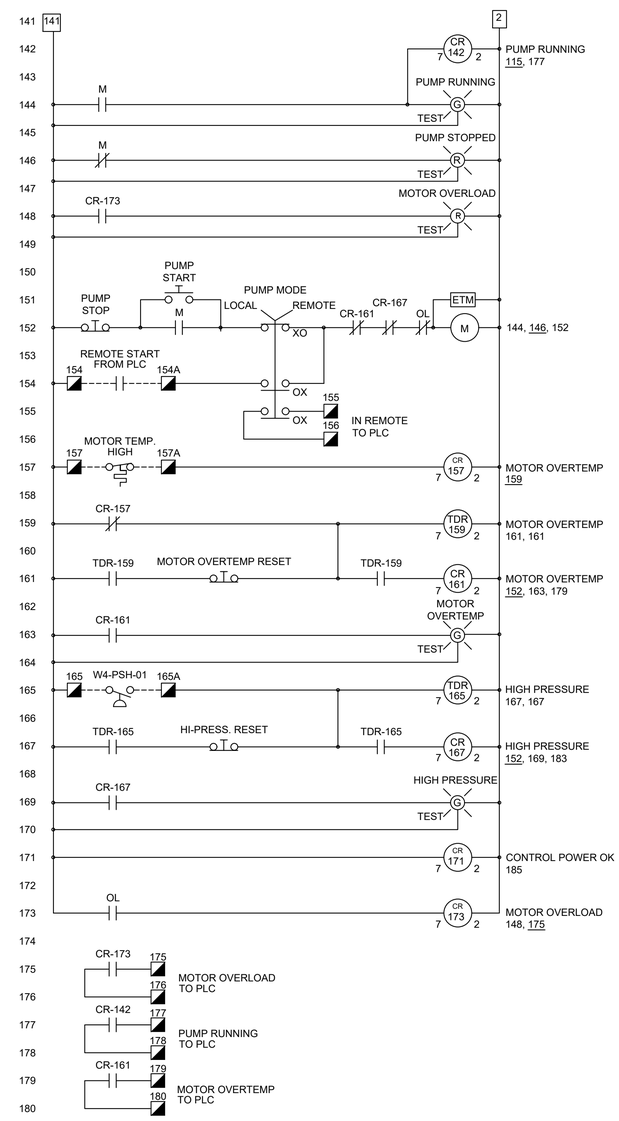

WIRE SIZES: (MINIMUMS)

UL LISTED TFFN,THWN,THHN,600V

LINE SIDE POWER	12 AWG
SECONDARY POWER	12 AWG
CONTROL WIRING	14 AWG
POWER BUS TO I/O	14 AWG
ANALOG LOOP POWER	16 AWG
DISCRETE I/O	16 AWG
ANALOG LOOP	16 AWG
ANALOG I/O	16 AWG

SYMBOL LEGEND:

- FIELD WIRING TERMINALS
- PANEL WIRING TERMINALS
- REVISION MARKER
- FIELD WIRING BY CONTRACTOR
- EQUIPMENT NOT BY C2i

WIRE COLOR CODES

1. POWER & CONTROL

BLACK	AC LINE
WHITE	AC NEUTRAL
GREEN	AC GROUND
RED	AC CONTROL
BLUE	DC POSITIVE
WHT/BLU	DC NEGATIVE
ORANGE	DC CONTROL
YELLOW	EXTERNAL POWER

2. SHIELDED CABLE

WHITE	SIGNAL POSITIVE
BLACK	SIGNAL NEGATIVE

NAMEPLATES:

1. 1/4" WHITE LETTERS ON BLACK LAMINATED PHENOLIC PLASTIC
2. NAMEPLATES WILL BE PROVIDED IDENTIFYING EACH COMPONENT, SELECTOR SWITCH, PILOT LIGHT, ETC.. NAMEPLATES WILL BE PERMANENTLY AFFIXED USING AN EPOXY PROCESS.
3. A MASTER NAMEPLATE WILL BE LOCATED ON THE EXTEIOR DOOR AS SHOWN ON THE PANEL LAYOUT DRAWING.

NOTES:

1. ALL CONTROL PANEL WIRING WILL BE NUMBERED ON BOTH ENDS WITH TYPE-WRITTEN HEAT SHRINKABLE WIRE MARKERS.
2. THE CONTROL PANEL WILL BE UL 508 CERTIFIED.

NO.	DATE	REVISION	BY	SEAL

ENGR	DR	CHK	APVD
JL	FL	JL	JL

Stantec
STANTEC (CERTIFICATE OF AUTHORIZATION #27013)
800 PARKWAY DRIVE SUITE 195
DEERFIELD BEACH, FLORIDA 33441-1828
TEL: (954) 487-1300
www.stantec.com

The Contractor shall verify and be responsible for all dimensions. DO NOT scale the drawing - any errors or omissions shall be reported to Stantec without delay.
The Copyrights to all designs and drawings are the property of Stantec. Reproduction or use for any purpose other than that authorized by Stantec is forbidden.

TRIBAL COMMUNITY DEVELOPMENT

PUBLIC WORKS DEPARTMENT
SEMINOLE TRIBE OF FLORIDA
5700 GRIFFIN RD.
DAVIE, FL 33024
PH (954) 966-6300

IMMOKALEE SEMINOLE INDIAN RESERVATION
RAW WATER WELL #4 WELLHEAD

PUMP CONTROL PANEL TYPICAL WIRING DIAGRAM

REUSE OF DOCUMENTS:

811 Know what's below. Call before you dig.

DATE	2023.08
PROJ	17731189
DWG	11189-E-500.DWG
	E-502

BID PLANS

DWG PATH: \\Us0231-ppfss01\workgroup\1773\active\17731189 Immokalee Well #4 Phase 2_Design\drawings\electrical\11189-E-500.dwg

PLOT DATE: Aug16, 2023 5:47pm

ATTACHMENT A

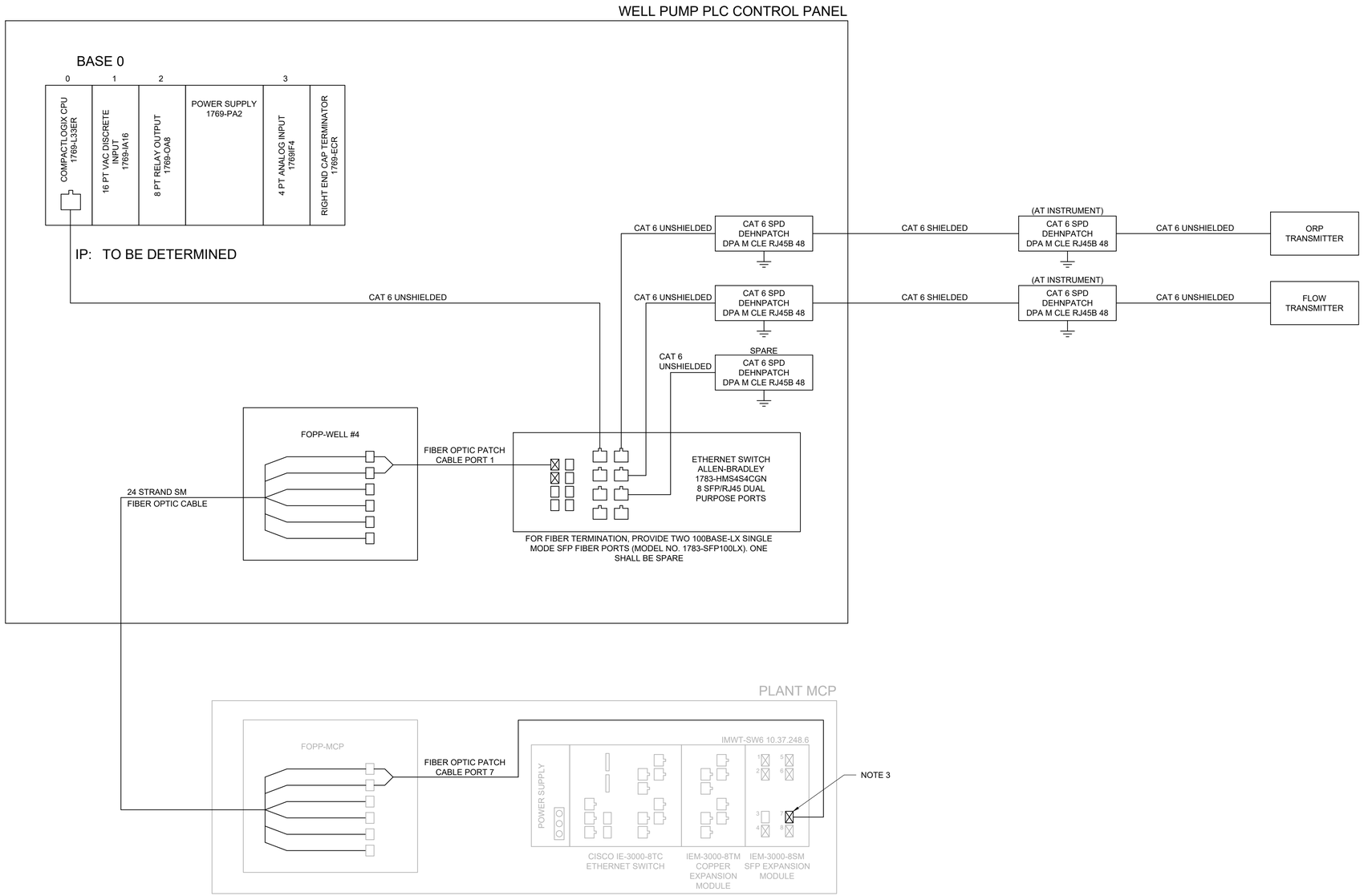

NOTES:

1. PROVIDE FIBER TERMINATING CONNECTORS TO SUIT THE POINT OF TERMINATION AND TO MATCH EXISTING. COORDINATE IN THE FIELD AND WITH APPROVED SHOP DRAWINGS, AND APPLY AS NEEDED.
2. UNUSED PORTS ON THE WELL PUMP PLC CONTROL PANEL NETWORK SWITCH SHALL BE PROGRAMMED TO RESTRICT NETWORK ACCESS ONLY TO REGISTERED MAC ADDRESSES. COORDINATE THIS EFFORT WITH THE OWNER.
3. FURNISH AND INSTALL CISCO 100BASE-LX SINGLE MODE RUGGED SFP MODULE (MODEL NO. GLC-FE-100LX-RGD) AS SHOWN.

NO.	DATE	REVISION	BY	SEAL

ENGR	DR	CHK	APVD
JL	FL	JL	JL

Stantec
STANTEC (CERTIFICATE OF AUTHORIZATION #27013)
800 PARKWAY DRIVE SUITE 195
DEERFIELD BEACH, FLORIDA 33441-1828
Tel.+1 954-481-1200
www.stantec.com

The Contractor shall verify and be responsible for all dimensions. DO NOT scale this drawing - any errors or omissions shall be reported to the designer of record without delay.
The Copyrights to all designs and drawings are the property of Stantec. Reproduction or use for any purpose other than that authorized by Stantec is forbidden.

TRIBAL COMMUNITY DEVELOPMENT

PUBLIC WORKS DEPARTMENT
SEMINOLE TRIBE OF FLORIDA
5700 GRIFFIN RD.
DAVIE, FL 33024
PH (954) 966-6300

REUSE OF DOCUMENTS:

IMMOKALEE SEMINOLE INDIAN RESERVATION
RAW WATER WELL #4 WELLHEAD

PLC CONTROL PANEL LAYOUT

811 Know what's below. Call before you dig.

DATE	2023.08
PROJ	17731189
DWG	11189-E-500.DWG
	E-503

BID PLANS

DWG PATH: \\Us0231-ppfss01\workgroup\1773\active\17731189 Immokalee Well #4 Phase 2_Design\drawings\electrical\11189-E-500.dwg

PLOT DATE: Aug16, 2023 5:47pm

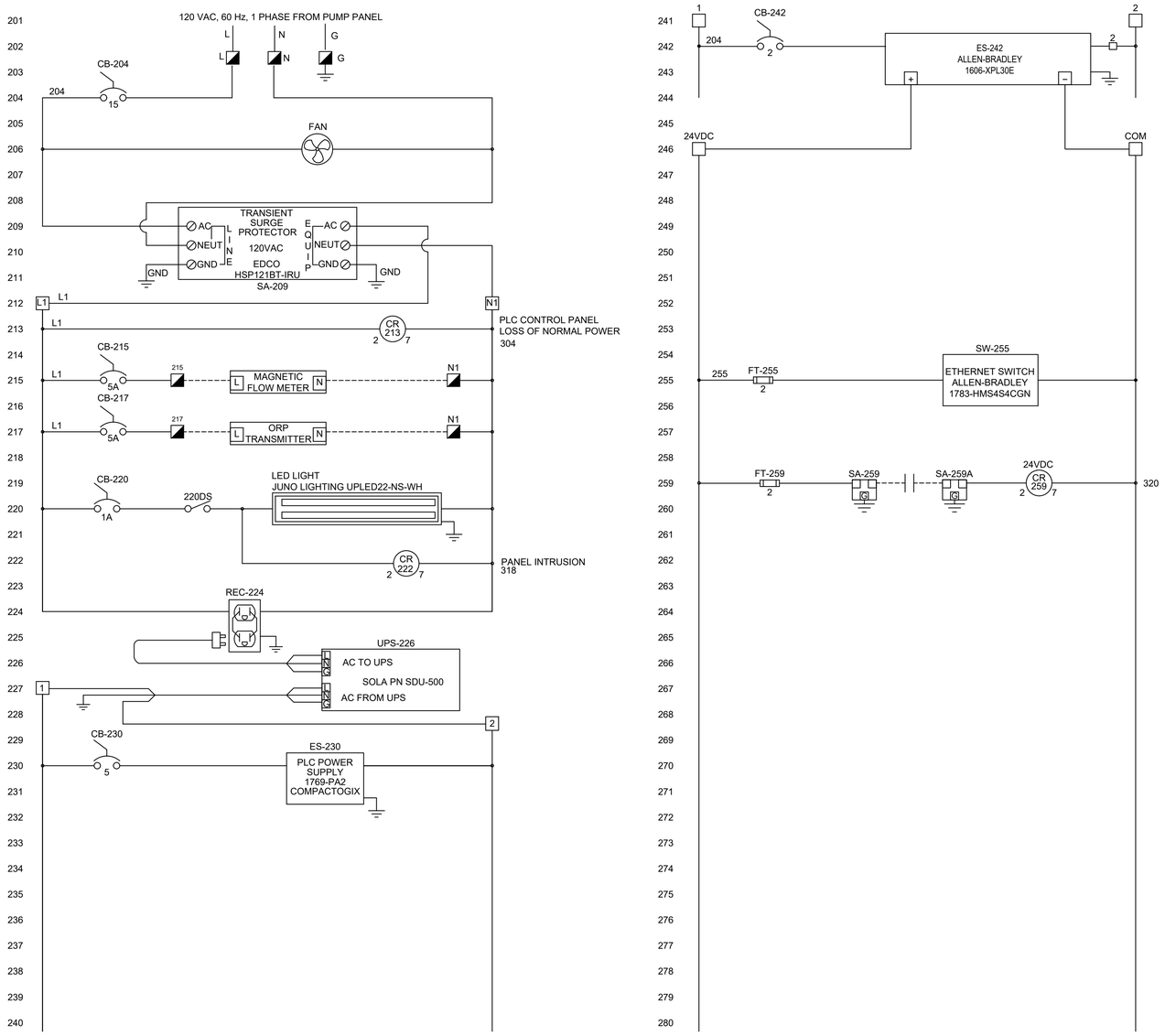

NOTES:

1. ALL CONTROL PANEL WIRING WILL BE NUMBERED ON BOTH ENDS WITH TYPE-WRITTEN HEAT SHRINKABLE WIRE MARKERS.
2. THE CONTROL PANEL SHALL BE UL 508 CERTIFIED.
3. PANEL SHALL BE 10kA SCCR MINIMUM

WIRE SIZES: (MINIMUMS)

UL LISTED TFFN,THWN,THHN,600V

LINE SIDE POWER	12 AWG
SECONDARY POWER	12 AWG
CONTROL WIRING	16 AWG
POWER BUS TO I/O	14 AWG
ANALOG LOOP POWER	16 AWG
DISCRETE I/O	16 AWG
ANALOG LOOP	16 AWG
ANALOG I/O	16 AWG

SYMBOL LEGEND:

- FIELD WIRING TERMINALS
- PANEL WIRING TERMINALS
- REVISION MARKER
- FIELD WIRING BY CONTRACTOR
- EQUIPMENT NOT BY C2i

WIRE COLOR CODES

1. POWER & CONTROL

BLACK	AC LINE
WHITE	AC NEUTRAL
GREEN	AC GROUND
RED	AC CONTROL
BLUE	DC POSITIVE
WHT/BLU	DC NEGATIVE
ORANGE	DC CONTROL
YELLOW	EXTERNAL POWER

2. SHIELDED CABLE

WHITE	SIGNAL POSITIVE
BLACK	SIGNAL NEGATIVE

NAMEPLATES:

1. 1/4" WHITE LETTERS ON BLACK LAMINATED PHENOLIC PLASTIC
2. NAMEPLATES SCREW-MOUNTED.
3. DEVICE TAGS MOUNTED INSIDE PANEL.

NO.	DATE	REVISION	BY	SEAL

ENGR	DR	CHK	APVD
JL	FL	JL	JL

Stantec
STANTEC (CERIFICATE OF AUTHORIZATION #27013)
800 PARKWAY DRIVE SUITE 195
DEERFIELD BEACH, FLORIDA 33441-1828
TEL: (954) 487-1300
www.stantec.com

The Contractor shall verify and be responsible for all dimensions. DO NOT scale this drawing - any errors or omissions shall be reported to the designer of record immediately.
The Copyrights to all designs and drawings are the property of Stantec. Reproduction or use for any purpose other than that authorized by Stantec is forbidden.

TRIBAL COMMUNITY DEVELOPMENT

PUBLIC WORKS DEPARTMENT
SEMINOLE TRIBE OF FLORIDA
5700 GRIFFIN RD.
DAVIE, FL 33024
PH (954) 966-6300

REUSE OF DOCUMENTS:

IMMOKALEE SEMINOLE INDIAN RESERVATION
RAW WATER WELL #4 WELLHEAD

PLC CONTROL PANEL PROCESSOR RACK LAYOUT AND WIRING

811 Know what's below. Call before you dig.

DATE	2023.08
PROJ	17731189
DWG	11189-E-500.DWG
	E-504

BID PLANS

ATTACHMENT A

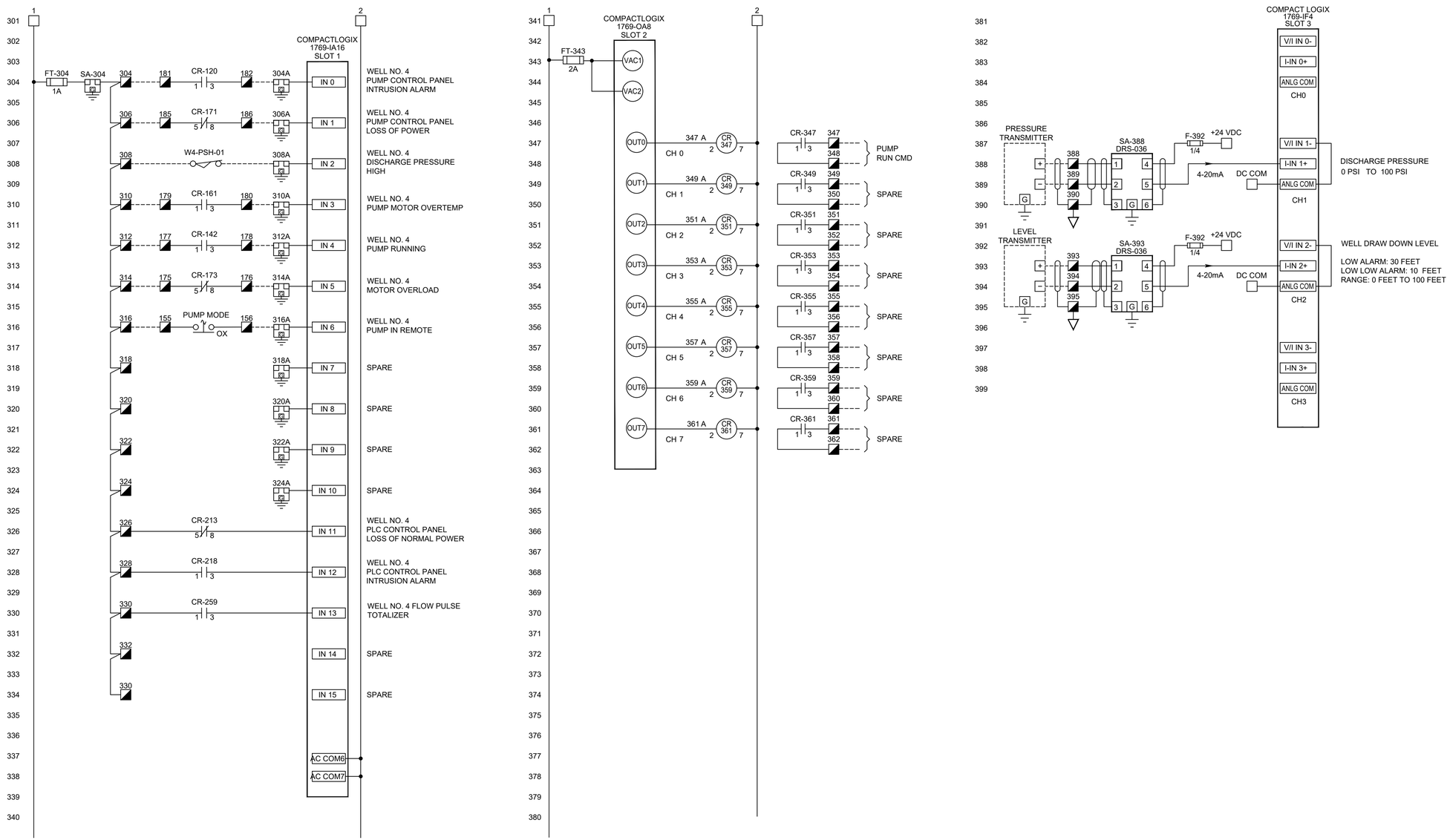

NO.	DATE	REVISION	BY	SEAL

ENGR	DR	CHK	APVD
JL	FL	JL	JL

Stantec
STANTEC (CERIFICATE OF AUTHORIZATION #27013)
800 PARKWAY DRIVE SUITE 95
DEERFIELD BEACH, FLORIDA 33441-1838
TEL: (954) 487-1300
www.stantec.com

The Contractor shall verify and be responsible for all dimensions. DO NOT scale this drawing - any errors or omissions shall be reported to Stantec without delay.
The Copyrights to all designs and drawings are the property of Stantec. Reproduction or use for any purpose other than that authorized by Stantec is forbidden.

TRIBAL COMMUNITY DEVELOPMENT

PUBLIC WORKS DEPARTMENT
SEMINOLE TRIBE OF FLORIDA
5700 GRIFFIN RD.
DAVIE, FL 33024
PH (954) 966-6300

REUSE OF DOCUMENTS:

IMMOKALEE SEMINOLE INDIAN RESERVATION
RAW WATER WELL #4 WELLHEAD

PLC CONTROL PANEL ELECTRICAL CONNECTIONS

811 Know what's below. Call before you dig.

DATE	2023.08
PROJ	17731189
DWG	11189-E-500.DWG
	E-505

BID PLANS

DWG PATH: \\Us0231-ppfss01\workgroup\1773\active\17731189 Immokalee Well #4 Phase 2_Design\drawings\electrical\11189-E-500.dwg

PLOT DATE: Aug16, 2023 5:47pm

ATTACHMENT A

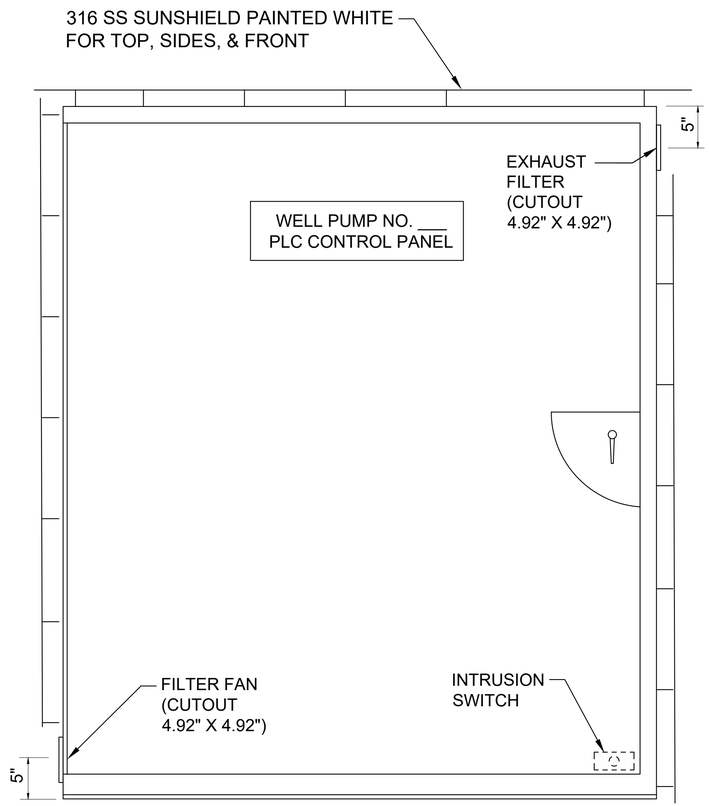

48"H X 42"W X 12"D, NEMA 3R, 316 STAINLESS STEEL PAINTED WHITE,
3-PT LATCH WITH LOCKABLE HASP, DRIP SHIELD KIT AND SUNSHIELD ON
TOP, SIDES AND FRONT, ALL 316 STAINLESS STEEL PAINTED WHITE

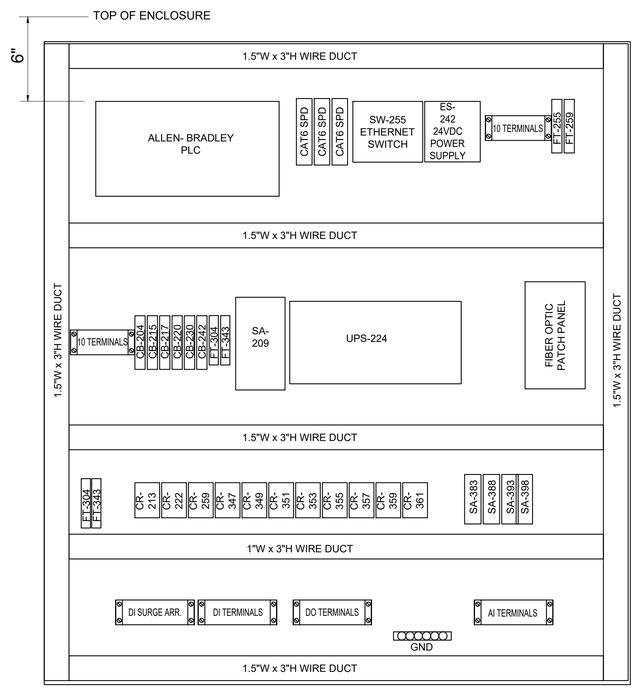

45"H X 39"W, ALUMINIUM BACKPAN

BID PLANS

NO.	DATE	REVISION	BY	SEAL

ENGR	DR	CHK	APVD
JL	FL	JL	JL

Stantec
STANTEC (CERTIFICATE OF AUTHORIZATION #27013)
800 PARKWAY DRIVE SUITE 195
DEERFIELD BEACH, FLORIDA 33441-1828
Tel: 954-487-1050
www.stantec.com

The Contractor shall verify and be responsible for all dimensions. DO NOT scale the drawing - any errors or omissions shall be reported to Stantec without delay.
The Copyrights to all designs and drawings are the property of Stantec. Reproduction or use for any purpose other than that authorized by Stantec is forbidden.

TRIBAL COMMUNITY DEVELOPMENT

PUBLIC WORKS DEPARTMENT
SEMINOLE TRIBE OF FLORIDA
5700 GRIFFIN RD.
DAVIE, FL 33024
PH (954) 966-6300

REUSE OF DOCUMENTS:

IMMOKALEE SEMINOLE INDIAN RESERVATION
RAW WATER WELL #4 WELLHEAD

PLC CONTROL PANEL TYPICAL WIRING DIAGRAM

811 Know what's below. Call before you dig.

DATE	2023.08
PROJ	17731189
DWG	11189-E-500.DWG
	E-506

DWG PATH: \\Us0231-ppfss01\workgroup\1773\active\17731189 Immokalee Well #4 Phase 2_Design\drawings\electrical\11189-E-500.dwg

PLOT DATE: Aug16, 2023 5:47pm

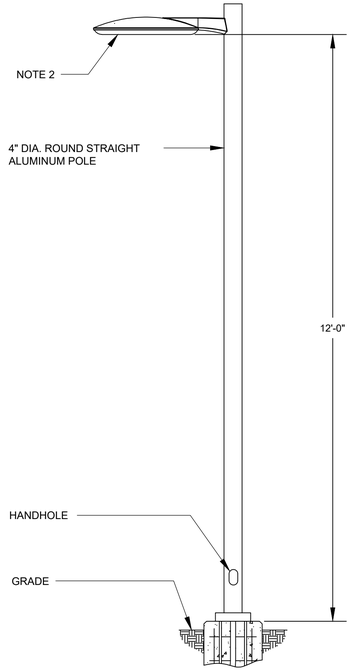

FULL EXTERIOR VIEW

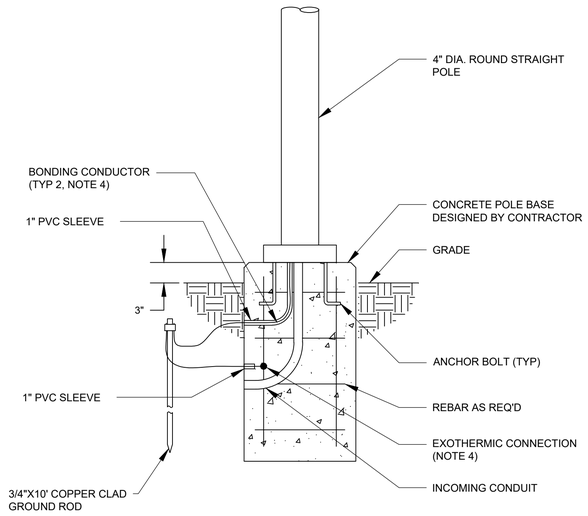

POLE BASE DETAILS

NOTES

1. SUBMIT WIND LOAD CALCULATIONS, SIGNED AND SEALED BY PROFESSIONAL ENGINEER REGISTERED IN THE STATE OF FLORIDA, CERTIFYING THAT THE COMPLETE LIGHT POLE ASSEMBLY, INCLUDING FIXTURE, CONCRETE BASE, AND ANCHOR SYSTEM, SATISFIES FLORIDA BUILDING CODE WIND LOAD REQUIREMENTS AS APPLICABLE FOR THE INSTALLED LOCATION.
2. ARM-MOUNT LUMINAIRE WITH DARK BRONZE, POWDER-COATED, SINGLE PIECE DIE-CAST ALUMINUM HOUSING, 13000 LUMEN OUTPUT, 4000K LIGHT COLOR TEMPERATURE, TYPE III MEDIUM LIGHT DISTRIBUTION, INTEGRAL PHOTOCELL. SUITABLE FOR OPERATING ON 120V SUPPLY. UL LISTED FOR WET LOCATIONS. LITHONIA DSX0LED-P6-4K-80CRI-T3M-MVOLT-DDBXD-PER-DLL127F 1.5 JU OR EQUAL.
3. LIGHT POLE COLOR FINISH SHALL MATCH THAT OF THE LUMINAIRE.
4. #6 AWG BARE, SOLID COPPER WIRE. LIGHT POLE GROUNDING SHALL BE IN ACCORDANCE WITH MANUFACTURER REQUIREMENTS.

LIGHT POLE DETAIL

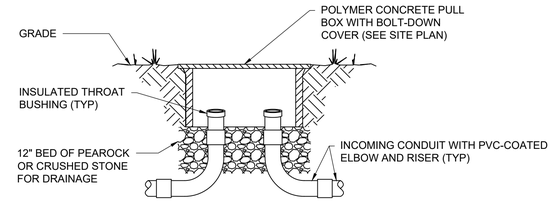

NOTES:

1. PULL BOX SHALL BE QUAZITE 11"X18"X18"D POLYMER CONCRETE BOX. QUAZITE PG1118BA18 OR EQUAL. PULL BOX COVER SHALL BE QUAZITE PG1118HH. SEE DWG E-101 FOR COVER TEXT.
2. LOAD RATING FOR PULL BOX AND COVER SHALL BE ANSI TIER 22.

PULL BOX DETAIL

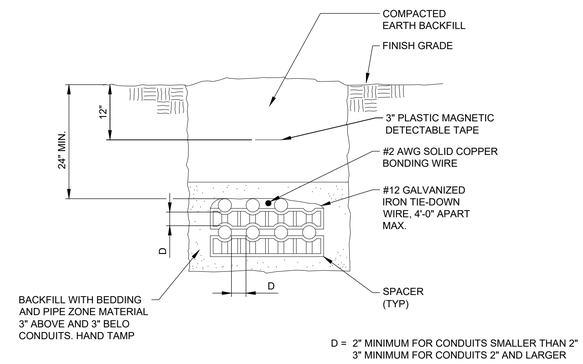

NOTES:

1. DUCTBANKS WITH MORE THAN ONE ROW OF DUCTS SHALL BE INSTALLED IN ACCORDANCE WITH THIS DETAIL.

DIRECT-BURIED DUCTBANK

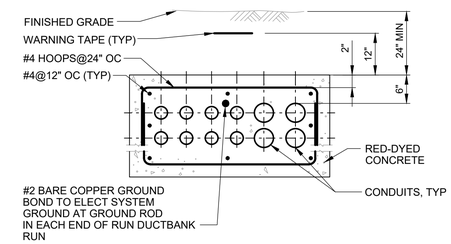

NOTES:

1. AT INTERSECTIONS WITH STRUCTURES HOOK #4'S INTO THE FOOTING OR WALL (TYP).

CONCRETE-ENCASED DUCTBANK

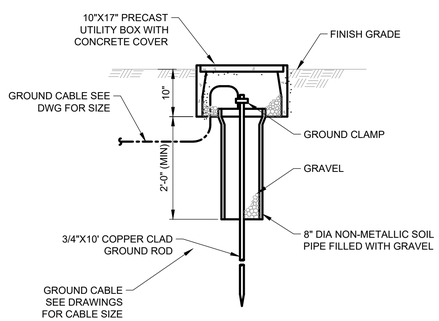

GROUND ROD IN TEST WELL

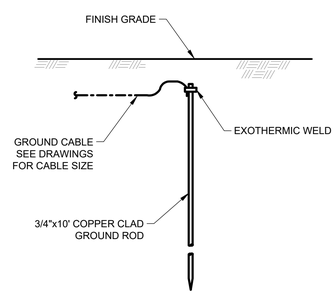

BURIED GROUND ROD

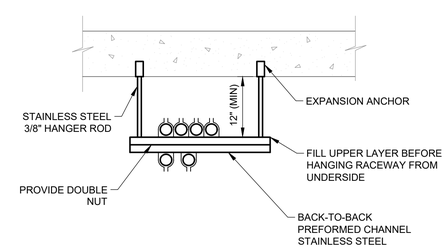

CONDUIT TRAPEZE

BID PLANS

NO.	DATE	REVISION	BY	SEAL

	DR	CHK	APVD
ENGR	FL	JL	JL

Stantec
STANTEC (CERTIFICATE OF AUTHORIZATION #27013)
800 PARKWAY DRIVE SUITE 195
DEERFIELD BEACH, FLORIDA 33441-1838
Tel.+1 954-421-1700
www.stantec.com

The Contractor shall verify and be responsible for all dimensions. DO NOT scale the drawing - any errors or omissions shall be reported to the Stantec Project Manager.
The Copyrights to all designs and drawings are the property of Stantec. Reproduction or use for any purpose other than that authorized by Stantec is forbidden.

TRIBAL COMMUNITY DEVELOPMENT
PUBLIC WORKS DEPARTMENT
SEMINOLE TRIBE OF FLORIDA
5700 GRIFFIN RD.
DAVIE, FL 33024
PH (954) 966-6300

IMMOKALEE SEMINOLE INDIAN RESERVATION
RAW WATER WELL #4 WELLHEAD

STANDARD DETAILS I

REUSE OF DOCUMENTS:

811 Know what's below. Call before you dig.

DATE	2023.08
PROJ	17731189
DWG	11189-E-500.DWG
	E-507

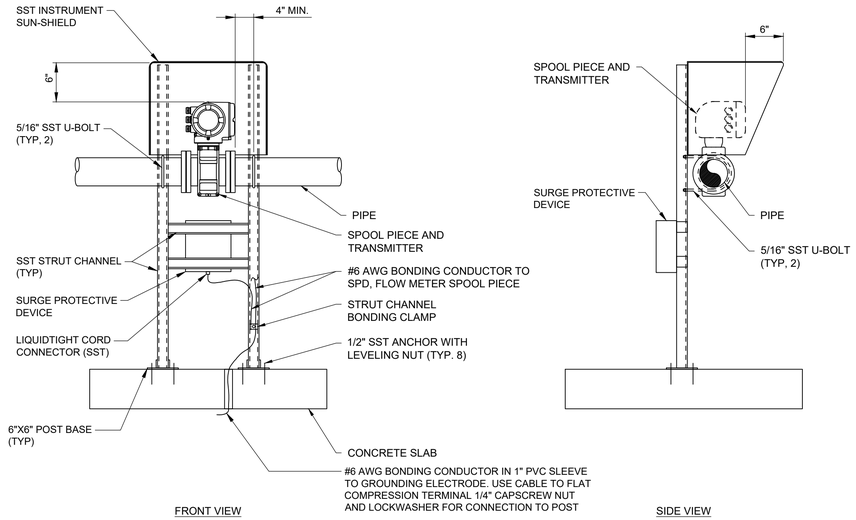

NOTES

1. ROUND OFF ALL EXPOSED EDGES AND CORNERS. REMOVE ALL BURRS
2. ALL HARDWARE SHALL BE STAINLESS STEEL.

FLOW METER SUNSHIELD DETAIL

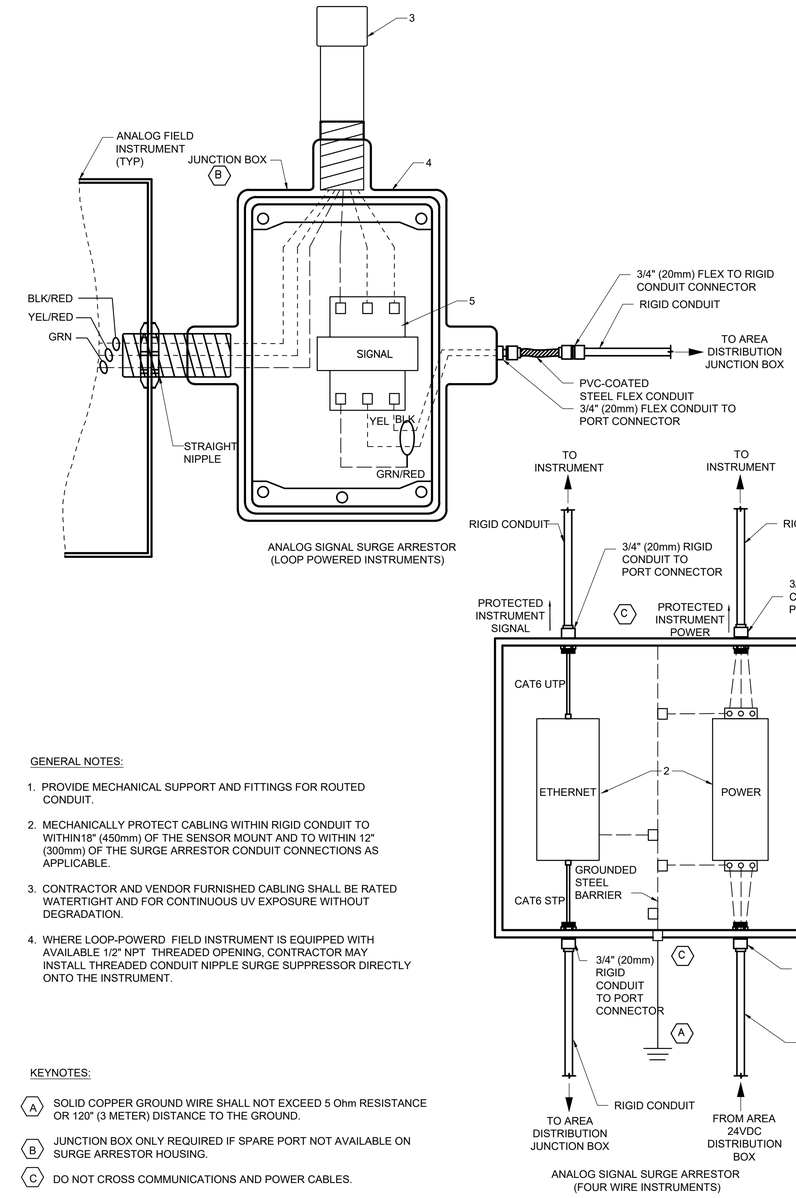

GENERAL NOTES:

1. PROVIDE MECHANICAL SUPPORT AND FITTINGS FOR ROUTED CONDUIT.
2. MECHANICALLY PROTECT CABLING WITHIN RIGID CONDUIT TO WITHIN18" (450mm) OF THE SENSOR MOUNT AND TO WITHIN 12" (300mm) OF THE SURGE ARRESTOR CONDUIT CONNECTIONS AS APPLICABLE.
3. CONTRACTOR AND VENDOR FURNISHED CABLING SHALL BE RATED WATERTIGHT AND FOR CONTINUOUS UV EXPOSURE WITHOUT DEGRADATION.
4. WHERE LOOP-POWERD FIELD INSTRUMENT IS EQUIPPED WITH AVAILABLE 1/2" NPT THREADED OPENING, CONTRACTOR MAY INSTALL THREADED CONDUIT NIPPLE SURGE SUPPRESSOR DIRECTLY ONTO THE INSTRUMENT.

KEYNOTES:

A. SOLID COPPER GROUND WIRE SHALL NOT EXCEED 5 Ohm RESISTANCE OR 120" (3 METER) DISTANCE TO THE GROUND.

B. JUNCTION BOX ONLY REQUIRED IF SPARE PORT NOT AVAILABLE ON SURGE ARRESTOR HOUSING.

C. DO NOT CROSS COMMUNICATIONS AND POWER CABLES.

BILL OF MATERIALS

ITEM	QTY	DESCRIPTION	SUPPLY	MATERIAL/ RATING (WATER)	MATERIAL/ RATING (CHEMICAL)
1	1	ENCLOSURE MOUNTED ON INSTRUMENT STAND	CONT	316 SS	316 SS
2	AR	ETHERNET AND AC POWER SURGE SUPPRESSOR/FILTER	MANF	NONE	NONE
3	1	MULTISTAGE SIGNAL SURGE SUPPRESSOR, THREADED CONDUIT NIPPLE HOUSING.	MANF	316 SS	316 SS
4	1	JUNCTION BOX (C)	CONT	316 SS	316 SS
5	1	DIN-RAIL MOUNTED TERMINAL BLOCK	CONT	LEXAN PLASTIC	LEXAN PLASTIC

FIELD INSTRUMENT SURGE PROTECTIVE DEVICE

BID PLANS

NO.	DATE	REVISION	BY	SEAL
ENGR	DR	CHK	APVD	
JL	FL	JL	JL	

Stantec
STANTEC (CERTIFICATE OF AUTHORIZATION #27013)
800 PARKWAY DRIVE SUITE 195
DEERFIELD BEACH, FLORIDA 33441-1828
Tel.+1 954-487-1200
www.stantec.com

The Contractor shall verify and be responsible for all dimensions. DO NOT scale this drawing - any errors or omissions shall be reported to Stantec without delay.
The Copyrights to all designs and drawings are the property of Stantec. Reproduction or use for any purpose other than that authorized by Stantec is forbidden.

TRIBAL COMMUNITY DEVELOPMENT

PUBLIC WORKS DEPARTMENT
SEMINOLE TRIBE OF FLORIDA
5700 GRIFFIN RD.
DAVIE, FL 33024
PH (954) 966-6300

REUSE OF DOCUMENTS:

IMMOKALEE SEMINOLE INDIAN RESERVATION
RAW WATER WELL #4 WELLHEAD

STANDARD DETAILS II

811 Know what's below. Call before you dig.

DATE	2023.08
PROJ	17731189
DWG	11189-E-500.DWG
	E-508

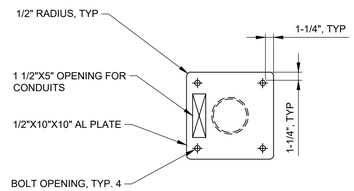

BASEPLATE DETAIL

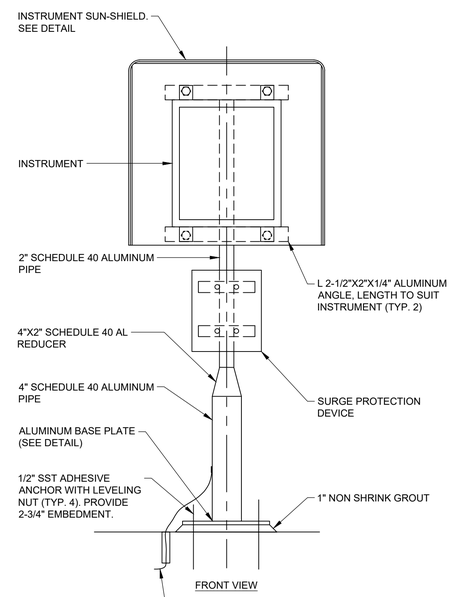

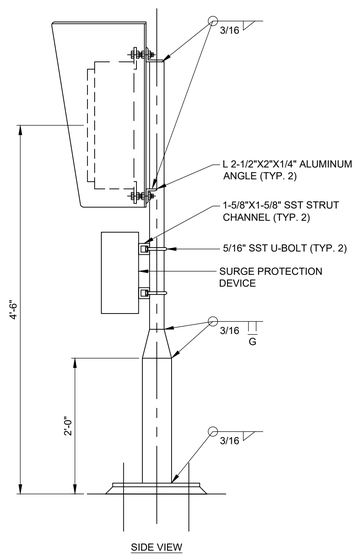

#6 AWG BONDING CONDUCTOR IN 1" PVC SLEEVE TO GROUNDING ELECTRODE. USE CABLE TO FLAT COMPRESSION TERMINAL 1/4" CAPSCREW NUT AND LOCKWASHER FOR CONNECTION TO POST

NOTES:

1. ROUND OFF ALL EXPOSED EDGES AND CORNERS. REMOVE ALL BURRS.
2. APPLY HEAVY COATING OF BITUMINOUS PAINT TO ALL ALUMINUM SURFACES IN DIRECT CONTACT WITH CONCRETE.
3. ALL HARDWARE SHALL BE STAINLES STEEL.

INSTRUMENT SUPPORT STANCHION

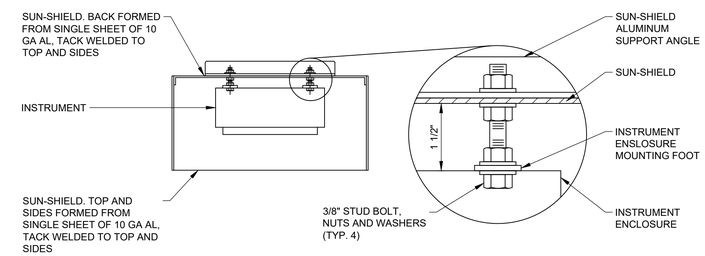

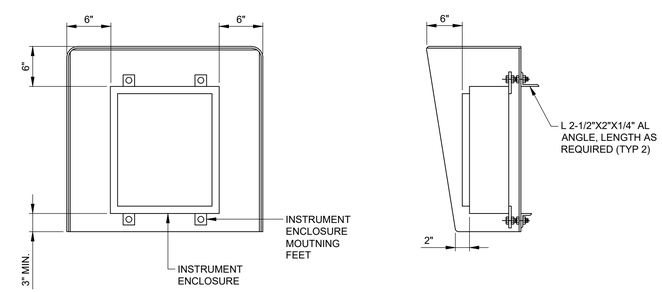

NOTES:

1. ROUND OFF ALL EXPOSED EDGES AND CORNERS. REMOVE ALL BURRS.
2. ALL HARDWARE SHALL BE STAINLES STEEL.

INSTRUMENT SUN-SHIELD

NO.	DATE	REVISION	BY	SEAL

ENGR	DR	CHK	APVD
JL	FL	JL	JL

Stantec
STANTEC (CERTIFICATE OF AUTHORIZATION #27013)
800 PARKWAY DRIVE SUITE 195
DEERFIELD BEACH, FLORIDA 33441-1828
TEL: 954-487-1200
www.stantec.com

The Contractor shall verify and be responsible for all dimensions. DO NOT scale the drawing - any errors or omissions shall be reported to Stantec without delay.
The Copyrights to all designs and drawings are the property of Stantec. Reproduction or use for any purpose other than that authorized by Stantec is forbidden.

TRIBAL COMMUNITY DEVELOPMENT

PUBLIC WORKS DEPARTMENT
SEMINOLE TRIBE OF FLORIDA
5700 GRIFFIN RD.
DAVIE, FL 33024
PH (954) 966-6300

REUSE OF DOCUMENTS:

IMMOKALEE SEMINOLE INDIAN RESERVATION
RAW WATER WELL #4 WELLHEAD

STANDARD DETAILS III

811 Know what's below. Call before you dig.

DATE	2023.08
PROJ	17731189
DWG	11189-E-500.DWG
	E-509

BID PLANS

ATTACHMENT A

KEYNOTES

1. FURNISH AND INSTALL NEW CIRCUIT BREAKER AS SHOWN. AIC SHALL BE 65KA RMS SYMMETRICAL AT 480VAC.
2. NEMA 4X SPD WITH 80KA SURGE CURRENT RATING AND 10KA NOMINAL DISCHARGE RATING, MINIMUM.
3. PLC PROGRAM TO BE FURNISHED BY THE OWNER FOR UPLOAD BY CONTRACTOR. SCADA PROGRAMMING AND INTEGRATION SHALL BE PERFORMED BY CONTRACTOR
4. MOTOR SPACE HEATER AND THERMOSTAT.
5. MOTOR HORSEPOWER SHOWN IS WORST CASE SIZE. MOTOR HORSEPOWER MAY BE REDUCED PENDING WELL TEST RESULTS. COORDINATE MOTOR STARTER SIZING WITH ACTUAL PUMP MOTOR FURNISHED. CABLE SIZING SHALL REMAIN AS INDICATED.
6. COMPLETE TAG NUMBERS FOR INSTRUMENTS SHOWN INCLUDE "W4-" AS A PREFIX. APPLY STAINLESS STEEL NAMEPLATE FOR EACH FIELD INSTRUMENT.
7. APPLY LABEL INDICATING THE AVAILABLE FAULT CURRENT AT MSB-1. INFORMATION SHOWN ON THIS LABEL SHALL MEET NEC ART. 110.24 REQUIREMENTS.

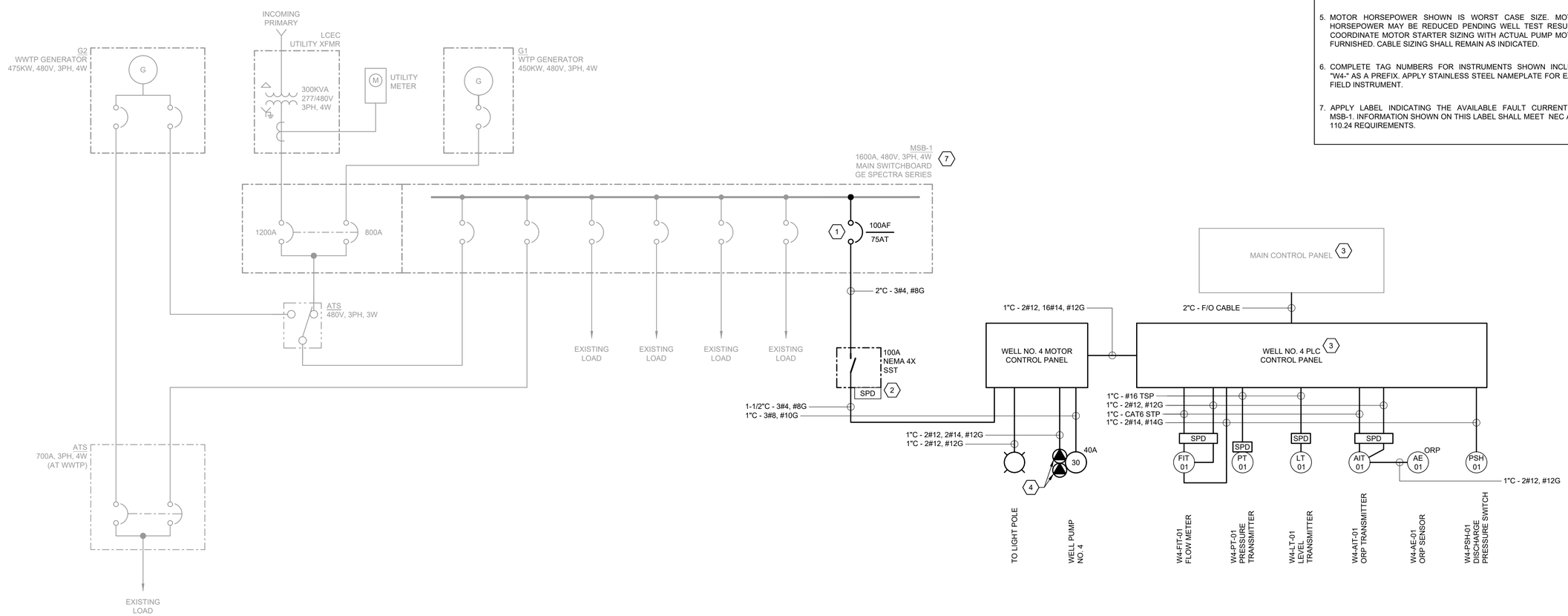

PHOTO: MAIN SWITCHBOARD MSB-1

EQUIPMENT	LOAD (KVA)
EXISTING PLANT LOAD(1)	234.8
WELL NO. 4 PUMP MOTOR	43.2
WELL NO. 4 MISCELLANEOUS	1.0
SUBTOTAL:	279.0
PLUS 25% EXISTING LOAD(2)	58.7
PLUS 25% LARGEST MOTOR(3)	24.0
CALCULATED KVA:	361.7
CALCULATED AMPS @ 480V, 3PH:	435.0

FOOTNOTES:

(1) MAXIMUM DEMAND OF 176.1 KW OVER THE LAST 2 YEARS, PER DATA FURNISHED BY THE SERVING UTILITY, LEE COUNTY ELECTRIC COOPERATIVE - NEC ART 220.87(1). A CONSERVATIVE POWER FACTOR OF 0.75 IS APPLIED TO THE MAXIMUM DEMAND TO CALCULATE THE EXISTING PLANT LOAD OF 234.8 KVA USED IN THIS CALCULATION.

(2) PER 2017 NEC ARTICLE 220.87(2).

(3) EXISTING HIGH SERVICE PUMP (75HP).

LOAD CALCULATION

BID PLANS

NO.	DATE	REVISION	BY	SEAL

	DR	CHK	APVD
ENGR	FL	JL	JL

Stantec
STANTEC (CERTIFICATE OF AUTHORIZATION #27013)
800 PARKWAY DRIVE SUITE 195
DEERFIELD BEACH, FLORIDA 33441-1838
Tel: (954) 487-1300
www.stantec.com

The Contractor shall verify and be responsible for all dimensions. DO NOT scale this drawing - any errors or omissions shall be reported to Stantec without delay.
The Copyrights to all designs and drawings are the property of Stantec. Reproduction or use for any purpose other than that authorized by Stantec is forbidden.

TRIBAL COMMUNITY DEVELOPMENT

PUBLIC WORKS DEPARTMENT
SEMINOLE TRIBE OF FLORIDA
5700 GRIFFIN RD.
DAVIE, FL 33024
PH (954) 966-6300

IMMOKALEE SEMINOLE INDIAN RESERVATION
RAW WATER WELL #4 WELLHEAD

SINGLE LINE DIAGRAM

REUSE OF DOCUMENTS:

811 Know what's below. Call before you dig.

DATE	2023.08
PROJ	17731189
DWG	11189-E-601.DWG
	E-601

DWG PATH: \\Us0231-ppfss01\workgroup\1773\active\17731189 Immokalee Well #4 Phase 2_Design\drawings\electrical\11189-E-601.dwg

PLOT DATE: Aug16, 2023 5:48pm